AGENDA

VALLEJO PLANNING COMMISSION
REGULAR MEETING – 7:00 P.M.
VIA TELECONFERENCE

Diosdado "J.R." Matulac, Chair
Kathleen Diohep, Vice-Chair
Peggy Cohen-Thompson
Jamar Stamps
Charles Palmares
Melissa Bowman
Donald Douglass

VIA TELECONFERENCE

www.cityofvallejo.net

April 19, 2021

IMPORTANT NOTICE

Until further notice, meetings of the Planning Commission are being conducted using teleconference and electronic means, consistent with State of California Executive Order N-29-30 regarding the COVID-19 pandemic. The live stream of the meeting may be viewed on television or online. Details may be found at www.cityofvallejo.net. In accordance with Executive Order N-29-30, the public may only view the meetings on television and/or online and not in the Council Chamber.

PUBLIC COMMENT: Members of the Public may provide public comments during the Planning Commission Meeting via ZOOM (https://zoomregular.cityofvallejo.net), or via phone, by dialing (669) 900-6833, enter meeting id: 914 0075 0676#

For additional instructions on how to speak during public comment, please visit, www.cityofvallejo.net/publiccomment

VIEW THE MEETING: There are three different ways you can view this public meeting:

- Watch Vallejo local channel 28
- Stream from the City website: www.cityofvallejo.net/Streaming
- Join the Zoom webinar: https://zoomregular.cityofvallejo.net

Want more City information? Members of the public can:

- Like us on Facebook (www.facebook.com/cityofvallejo)
- Sign up to receive City Communications via e-mail (www.cityofvallejo.net/living/connect)
- Sign up to receive City updates and get connected with your neighbors on Nextdoor (www.nextdoor.com)

This AGENDA contains a brief general description of each item to be considered. The posting of the recommended actions does not indicate what action may be taken. If comments come to the Planning Commission without prior notice and are not listed on the AGENDA, no specific answers or response should be expected at this meeting per State law.

Notice of Availability of Public Records: All public records relating to an open session item, which are not exempt from disclosure pursuant to the Public Records Act, that are distributed to a majority of the Planning Commission will be available on the City of Vallejo website at www.cityofvallejo.net subject to staff's ability to post the documents prior to the meeting.

Disclosure Requirements: Government Code Section 84308 (d) sets forth disclosure requirements which apply to persons who actively support or oppose projects in which they have a "financial interest", as that term is defined by the Political Reform Act of 1974. If you fall within that category, and if you (or your agent) have made a contribution of $250 or more to any commissioner within the last twelve months to be used in a federal, state or local election, you must disclose the fact of that contribution in a statement to the Commission.

Appeal Rights: The applicant or any party adversely affected by the decision of the Planning Commission may, within ten days after the rendition of the decision of the Planning Commission, appeal in writing to the City Council by filing a written appeal with the City Clerk. Such written appeal shall state the reason or reasons for the appeal and why the applicant believes he or she is adversely affected by the decision of the Planning Commission. Such appeal shall not be timely filed unless it is actually received by the City Clerk or designee no later than the close of business on the tenth calendar day after the rendition of the decision of the Planning Commission. If such date falls on a weekend or City holiday, then the deadline shall be extended until the next regular business day.

Notice of the appeal, including the date and time of the City Council's consideration of the appeal, shall be sent by the City Clerk to all property owners within two hundred or five hundred feet of the project boundary, whichever was the original notification boundary.

The Council may affirm, reverse or modify any decision of the Planning Commission which is appealed. The Council may summarily reject any appeal upon determination that the appellant is not adversely affected by a decision under appeal.

	The Council Chambers in City Hall is ADA compliant. Devices for the hearing impaired are available from the City Clerk. Requests for disability related modifications or accommodations, aids or services may be made by a person with a disability to the City Clerk's office no less than 72 hours prior to the meeting as required by Section 202 of the Americans with Disabilities Act of 1990 and the federal rules and regulations adopted in implementation thereof.

If you have any questions regarding any of the following agenda items, please call the assigned planner or project manager at (707) 648-4326.

AGENDA
City of Vallejo Planning Commission **April 19, 2021**

1. CALL TO ORDER

2. PLEDGE OF ALLEGIANCE

3. ROLL CALL

4. APPROVAL OF MINUTES

A. March 1, 2021
B. March 15, 2021 – Special Meeting
C. March 15, 2021

5. WRITTEN COMMUNICATIONS

6. REPORT OF THE SECRETARY

A. Upcoming Meetings

May 3, 2021	*No items tentatively scheduled*
May 17, 2021	*No items tentatively scheduled*

7. CITY ATTORNEY REPORT

8. REPORT OF THE PRESIDING OFFICER AND MEMBERS OF THE PLANNING COMMISSION

9. REPORT OF THE SUBCOMMITTEES

10. REPORT OF THE CITY COUNCIL LIAISON

11. COMMUNITY FORUM

Due to the current Shelter at Home Order and in conformance with the Governor's Executive Order N-29-30, the City of Vallejo has opted to hold Planning Commission meetings via teleconference. Any interested members of the public desiring to communicate with the Planning Commission as part of the Community Forum may do so via ZOOM (https://zoomregular.cityofvallejo.net), or via phone, by dialing (669) 900-6833, enter meeting id: 914 0075 0676#

12. CONSENT CALENDAR AND APPROVAL OF THE AGENDA

Due to the current Shelter at Home Order and in conformance with the Governor's Executive Order N-29-30, the City of Vallejo has opted to hold Planning Commission meetings via teleconference. Any interested members of the public desiring to communicate with the Planning Commission as part of the Consent Calendar and Approval of the agenda may do so via ZOOM (https://zoomregular.cityofvallejo.net), or via phone, by dialing (669) 900-6833, enter meeting id: 9140075 0676#

A. General Plan Conformance Review for Water Department Fiscal Year 2021-2022 Capital Improvement Program New or Modified Projects

RECOMMENDATION: Adopt Resolution 21-05 finding that the new or modified projects proposed for the Water Department Fiscal Year (FY) 2021-22 Capital Improvement Program conform with the City of Vallejo's General Plan 2040.

13. PUBLIC HEARING

Due to the current Shelter at Home Order and in conformance with the Governor's Executive Order N-29-30, the City of Vallejo has opted to hold Planning Commission meetings via teleconference. Any interested members of the public desiring to communicate with the Planning Commission as part of the Public Hearing may do so via ZOOM (https://zoomregular.cityofvallejo.net), or via phone, by dialing (669) 900-6833, enter meeting id: 914 0075 0676#

A. PROJECT TITLE: Crown Hill Materials – Site Development

PROJECT LOCATION: 1888 Broadway / APN: 0052-090-170, -210, -220, -230

PROJECT APPLICANT: Bunty Sidhu

PROJECT DESCRIPTION: The project is a request for Site Development approval for the upgrading of a concrete batch facility, which is an accessory use to a landscaping business. The equipment was upgraded without benefit of permits. The maximum height of the equipment is 59-feet, 4-inches. No increase in concrete output is proposed.

PROPOSED ENVIRONMENTAL DETERMINATION: The project is categorically exempt pursuant to Section 15303 and 15311 of the California Environmental Quality Act (CEQA) Guidelines (Class 3: “New Construction or Conversion of small structures” and Class 11: “Accessory Structures”). Therefore, no further environmental review is required.

STAFF RECOMMENDATION: Staff recommends that the Planning Commission adopt Resolution to **APPROVE** UP#19-0004.

PROJECT MANAGER: Cesar Orozco, Associate Planner
cesar.orozco@cityofvallejo.net

14. ACTION CALENDAR

NOTICE: Members of the public wishing to address the Planning Commission on Action Calendar Items may do so via ZOOM *(https://zoomregular.cityofvallejo.net),* or via phone, by dialing (669) 900-6833, *enter meeting id: 914 0075 0676#.* For additional instructions on how to speak during public comment, please visit, www.cityofvallejo.net/publiccomment.

15. OTHER

Due to the current Shelter at Home Order and in conformance with the Governor's Executive Order N-29-30, the City of Vallejo has opted to hold Planning Commission meetings via teleconference. Any interested members of the public desiring to communicate with the Planning Commission as part of the Other item may do so via ZOOM (https://zoomregular.cityofvallejo.net), or via phone, by dialing (669) 900-6833, enter meeting id: 914 0075 0676#

16. ADJOURNMENT

I, Narcissa Wilson, Planning Executive Secretary, do hereby certify that I have caused a true copy of the above notice and agenda to be delivered to each of the members of the Vallejo Planning Commission, at the time and in the manner prescribed by law and that this agenda was posted at City Hall, 555 Santa Clara Street, CA at 7:00 p.m. Tuesday, April 13, 2021.

Narcissa Wilson

Dated April 13, 2021 Narcissa Wilson, Planning Executive Secretary

Minutes

CITY OF VALLEJO PLANNING COMMISSION
REGULAR MEETING MINUTES
COUNCIL CHAMBERS
March 1, 2021

1. CALL TO ORDER

The meeting was called to order by Chairman Matulac at 7:01 p.m.

2. PLEDGE OF ALLEGIANCE

3. ROLL CALL

Present: Chair Matulac, Vice-Chair Diohep, Commissioners Palmares, Stamps, and Cohen-Thompson and Bowman
Absent: None
Staff present: Interim Deputy City Manager Hayes, Interim Planning and Development Services Director Ratcliffe, City Attorney Nebb, Planning Manager Kavanugh-lynch, Senior Planner Atkinson, Associate Planner Orozco

4. APPROVAL OF MINUTES

A. February 8, 2021
B. February 17, 2021
C. February 24, 2021

On a motion of Vice-Chair Diohep, second by Commissioner Cohen-Thompson, with Commissioner Bowman is abstained from February 17, 2021 meeting, the commission approve the minutes with the following vote:

VOTE:

AYES: Chair Matulac, Vice-Chair Diohep, Commissioners Palmares, Bowman and Cohen-Thompson
NOES: None
ABSENT: Commissioner Stamps
ABSTAIN: None

5. WRITTEN COMMUNICATIONG – Staff provided written communications to the Commission and in the packet regarding the two action items.

6. REPORT OF THE SECRETARY

A. Upcoming Meetings:

March 15, 2021	6:00 p.m. Special Meeting: V-Town Major Use Permit to allow a Retail Cannabis business with accessory uses of non-volatile cannabis manufacturing and distribution at 5184 Sonoma Boulevard: Suite 300 (APN: 0067-150-300).
March 15, 2021	7:00 p.m. Regular Meeting: Zoning Code, Associated General Plan Amendments and Initial Study/mitigated Negative Declaration – Public Hearing

Interim Planning and Development Services Director Ratcliffe commented on item A and provided an update on the new zoning code.

7. CITY ATTORNERY REPORT – City Attorney Nebb reminded the Commission on social media communication and possible violation to the Brown Act. City Attorney Nebb provided an overview on Ex Parte Communications.

8. REPORT OF THE PRESIDING OFFICE AND MEMBERS OF THE PLANNING COMMISSION AND LIAISON REPORTS

Commissioner Bowman commented on reviewing the draft zoning code and encouraged the community and HOAs to sign up to receive updates from the City.

9. REPORT OF THE SUBCOMMITTEES – None

10. REPORT OF THE CITY COUNCIL LIAISON

Council Member Miessner thanked the Commissioners, City Staff and community for being engaged on the Zoning Code.

11. COMMUNITY FORUM – Robert Schussel, Anne Carr, Commissioner Gordon

12. CONSENT CALANDER AND APPROVAL OF THE AGENDA

A. Adopt Resolution receiving the General Plan and Housing Element Annual Progress Report for the Calendar year 2020 and recommending the Council accept the same and direct submittal to the State.

Action: Moved by Vice-Chair Diohep, second by Commissioner Cohen-Thompson, to approve the consent calendar and agenda.

VOTE:

AYES:	Chair Matulac, Vice-Chair Diohep, Commissioners Palmares, Bowman Cohen-Thompson and Stamps
NOES:	None
ABSENT:	None
ABSTAIN:	None

13. PUBLIC HEARING

A. Oakwood Apartments; APN: 0061-160-210; Environmental Document (ED)#19-0002, Site Development Permit (SD)#20-0003, Major Use Permit (UP) #20-0005, Minor Exception (ME)#20-0003 and Landscape Review (LR)#20-0002

Interim Planning and Development Services Director Ratcliffe Introduced Senior Planner Atkinson.

Senior Planner Atkinson presented the item.

Commissioners asked questions and staff responded.

Chair Matulac opened for public comments.

Public Comments – Robert Schussel, Commissioner Gordon, Jimmy Genn

Chair Matulac closed public comments.

Commissioner commented on the project.

Action: Moved by Commissioner Bowman, second by Cohen-Thompson to adopt resolution No. PC21-02 to approve Environmental Document (ED)#19-0002, Site Development Permit (SD)#20-0003, Major Use Permit (UP) #20-0005, Minor Exception (ME)#20-0003 and Landscape Review (LR)#20-0002 based on the findings in Resolution No. PC21-02.

VOTE:

AYES: Chair Matulac, Commissioners Palmares, Bowman Cohen-Thompson and Stamps
NOES: Vice-Chair Diohep
ABSENT: None
ABSTAIN: None

Chair Matulac called for a five-minute break.

B. ReLeaf Alternative, Inc. Appeal; 128 Robles Way (APN:0079-141-160)

Interim Planning and Development Services Director Ratcliffe Introduced Senior Planner Atkinson.

Senior Planner Atkinson presented the item.

Ex. Parte Communications:
Commissioner Bowman communicated with the public and drove to the location.
Commissioner Palmares communicated with the public.
Commissioner Cohen-Thompson spoke with the projects engineer.
Chair Matulac communicated with the applicant and visited the site.
Vice-Chair Diohep visited the site and the existing location.

The appellant Margaret Plump presented their appeal.

The applicant Mr. Solis presented their rebuttal.

Commissioners asked questions and staff responded.

Chair Matulac opened for public comments.

Public Comments - Claude Jursell, Judy Wilkins, Darren Darcy, Jackie Corcen, Sandra Rowell, Tina Fowler, Anne Carr, Miles, James Cooper, Margaret Plump

Chair Matulac closed public comments.

Commissioner commented on the project.

DRAFT

Action: Moved by Vice-Chair Diohep, and second by Commissioner Cohen-Thompson, direct staff denying the Appeal (APP)#21-0002 and upholding the Minor Use Permit (MUP) #20-0008 based on the review of staff presentation, admissions, and finding that the use meets the City's requirements and directing staff to bring back the resolution for the next regular scheduled Planning Commission meeting.

VOTE:

AYES: Chair Matulac, Vice-Chair Diohep, Commissioners Palmares, Stamps, Bowman and Cohen-Thompson
NOES: None
ABSENT: None
ABSTAIN: None

14. ACTION CALENDAR - None

15. OTHER - None

16. ADJOURNMENT

Chair Matulac adjourned the meeting at 11:37 p.m.

_____
DIOSDADO "J.R." MATULAC, CHAIRPERSON

ATTEST:

_____
CESAR OROZCO
ASSOCIATE PLANNER

DRAFT

CITY OF VALLEJO PLANNING COMMISSION
SPECIAL MEETING MINUTES
COUNCIL CHAMBERS
March 15, 2021

1. CALL TO ORDER

The meeting was called to order by Chair Matulac at 6:06 p.m.

2. PLEDGE OF ALLEGIANCE

3. ROLL CALL

Present: Chair Matulac, Vice-Chair Diohep, Commissioners Palmares, Cohen-Thompson, Stamps and Bowman
Absent: None
Staff present: Interim Deputy City Manager Hayes, Interim Planning and Development Services Director Ratcliffe, City Attorney Nebb, Senior Planner Atkinson

4. PUBLIC HEARING

A. V-Town Farms – 5184 Sonoma Boulevard: Suite 300 (APN:0067-150-300); Major Use Permit (UP) #20-0008

Interim Deputy Planning and Development Director Ratcliffe introduced Senior Planner Atkinson.

Senior Planner Atkinson introduced the project.

The applicant conducted a presentation.

Commissioner asked questions and staff responded.

Chair Matulac opened for public comment.

Speakers – Tom Menasco, SG Ellison, Peter Wohlfeiler, Karyl Carter, Rohonda Chadwick, Robert Schussel, Max Del Real, Joseph Ramani, Jolieane Lofayete, Anne Carr, Sam Houston, Juan Garcia Flores, Joanne, Juan Cisneros, Rick Sereghy, George Espinosa, Sancho Blustrip, Tamsen Plume, Tel Lemonte.

Chair Matulac closed for public comment.

Commissioner commented on the project.

Action: Moved by Cohen-Thompson, second by Commissioner Bowman, to adopt Resolution to Approve Major Use Permit (UP) #20-0008 based on the findings in the Resolution.

DRAFT

VOTE:

AYES: Chair Matulac, Commissioners Palmares, Bowman Cohen-Thompson and Stamps
NOES: Vice-Chair Diohep
ABSENT: None
ABSTAIN: None

5. ADJOURNMENT

Chair Matulac adjourned the meeting at 8:15 p.m.

_____
DIOSDADO "J.R." MATULAC, CHAIRPERSON

ATTEST:

_____
CESAR OROZCO
ASSOCIATE PLANNER

DRAFT

CITY OF VALLEJO PLANNING COMMISSION
REGULAR MEETING MINUTES
COUNCIL CHAMBERS
March 15, 2021

1. CALL TO ORDER

The meeting was called to order by Chairman Matulac at 8:31 p.m.

2. PLEDGE OF ALLEGIANCE

3. ROLL CALL

Present: Chair Matulac, Vice-Chair Diohep, Commissioners Palmares, Stamps, and Cohen-Thompson and Bowman
Absent: None
Staff present: Interim Deputy City Manager Hayes, Interim Planning and Development Services Director Ratcliffe, City Attorney Nebb, Senior Planner Hightower

4. APPROVAL OF MINUTES - None

5. WRITTEN COMMUNICATIONG – Written Communications were submitted after the pack was published and are available online for review.

6. REPORT OF THE SECRETARY

A. Upcoming Meetings:

April 5, 2021	General Plan Conformance Review for the Water Department
	FY2021-2022 Capital Improvement Program (Tentative)
April 19, 2021	Crown Hill Materials – Site Development (Tentative)

Interim Planning and Development Services Director Ratcliffe commented on item A and provided an update on the new zoning code.

7. CITY ATTORNERY REPORT – City Attorney Nebb commented on the last City Council meeting on illegal dumping, trash and neighborhood law program.

8. REPORT OF THE PRESIDING OFFICE AND MEMBERS OF THE PLANNING COMMISSION AND LIAISON REPORTS

Commissioner Palmares commented on an email sent to staff regarding development standards for the new code.

Chair Matulac commented on continuing the meeting and opening up for public comment.

9. REPORT OF THE SUBCOMMITTEES – None

DRAFT

10. REPORT OF THE CITY COUNCIL LIAISON

Council Member Miessner commented on the League of Cities training for eligible Planning Commissioners and the number of applicants that will be interviewed for the Planning Commission.

11. COMMUNITY FORUM – None

12. CONSENT CALANDER AND APPROVAL OF THE AGENDA

A. ReLeaf Alternative, Inc. Appeal

Recommendation: Staff recommends that the Planning Commission adopts Resolution No. PC21-02 to DENY Appeal (APP) #21-0002 and to uphold the Planning and Developments Services Director's decision to approve Minor Use Permit (MUP) #20-0008 for ReLeaf Alternative, Inc. based on the findings in Resolution No. PC21-03.

Action: Moved by Vice-Chair Diohep, second by Commissioner Cohen-Thompson, to approve the consent calendar and agenda.

VOTE:

AYES:	Chair Matulac, Vice-Chair Diohep, Commissioners Palmares, Bowman Cohen-Thompson and Stamps
NOES:	None
ABSENT:	None
ABSTAIN:	None

13. PUBLIC HEARING

A. New Zoning Code

Interim City Manager Hayes introduced the item.

Interim Planning and Development Services Director Ratcliffe and Senior Planner Hightower presented the item.

Chair Matulac opened for public comments.

Public Comments – Bobby Mazaheri, Robert Schussel, Farideh Mazaheri, Anne Carr, Brendan Riley, Brian Harkins

Chair Matulac closed public comments.

Commissioners asked questions and staff responded.

Commissioners commented on the project.

Action: Moved by Vice-Chair Diohep, second by Commissioner Cohen-Thompson, to continue the public hearing to August 29, 2021 Planning Commission Meeting for action.

VOTE:

DRAFT

AYES: Chair Matulac, Vice-Chair Diohep, Commissioners Palmares, Bowman Cohen-Thompson and Stamps
NOES: None
ABSENT: None
ABSTAIN: None

14. ACTION CALENDAR - None

15. OTHER - None

16. ADJOURNMENT

Chair Matulac adjourned the meeting at 9:50 p.m.

_____
DIOSDADO "J.R." MATULAC, CHAIRPERSON

ATTEST:

_____
CESAR OROZCO
ASSOCIATE PLANNER

DRAFT

Consent

DATE: April 19, 2021

TO: Planning Commission

FROM: Mike Malone, Water Department Director

SUBJECT: **GENERAL PLAN CONFORMANCE REVIEW FOR WATER DEPARTMENT FISCAL YEAR 2021-2022 CAPITAL IMPROVEMENT PROGRAM NEW OR MODIFIED PROJECTS**

RECOMMENDATION

After a public hearing, adopt Resolution 21-05 finding that the new or modified projects proposed for the Water Department Fiscal Year (FY) 2021-22 Capital Improvement Program conform with the City of Vallejo's General Plan 2040.

REASONS FOR RECOMMENDATION

The City Water Department's Capital Improvement Program (CIP) is an important planning tool that identifies water system infrastructure and associated facility projects, costs, funding mechanisms, and priorities for execution. The CIP is adopted for a five-year period and updated annually to show unspent funds for projects not yet completed and to add a new year to the cycle. It also reflects any changes in the priorities for projects that have not yet started. Each year, pursuant to California Government Code Section 65401, the Planning Commission must review the "ensuing fiscal year" of the CIP for conformance with the City's General Plan and convey its findings to the City Council. The Commission's review is limited to General Plan conformance and does not include recommendations on the projects (except as related to General Plan conformance), priorities or budget projections of the CIP. Following this hearing, the City Council will conduct its own hearing and make a determination as to final adoption of the CIP. Of the CIP projects planned for FY 2021-22, most have already received a determination from the Planning Commission that they conform with the City's General Plan 2040; nine (9) projects are new or modified and require review by the Planning Commission.

BACKGROUND AND DISCUSSION

Capital improvements are those individual construction projects and purchases of land, equipment, and contract services that cost more than $50,000. Capital improvement planning is one of the main ways communities implement the General Plan. CIP funding priorities reflect community values, needs, desired services and projects and resources to accomplish them.

The objectives of the CIP are as follows:

- To provide increased planning and coordination of CIP projects.
- To relate the planning of CIP projects more effectively to general City goals and fiscal capability.
- To assist City staff in projecting impacts on future workload requirements, department programs and the City's operating budget.

- To ensure conformance of the capital projects with the City's General Plan.
- To allocate resources to the City's highest priority projects.
- To identify funding shortfalls and develop funding strategies.

The CIP forecasts the City's proposed major projects over the next five (5) years. The first year of the CIP includes those projects proposed for funding within the City of Vallejo's FY 2021-22 budget. The capital needs for the City, including the Water system capital needs, exceed the amount of available (and anticipated) revenue, therefore, the CIP includes proposed appropriations for FY and anticipated proposed projects in the upcoming year to capture the full needs of the City and enable the Water Department to submit prioritized projects for Council approval. Pursuant to California Government Code Section 66002(a), the CIP includes the location, size, timing of availability, and estimated costs for all improvements.

On August 29, 2017, the City Council adopted General Plan 2040, a comprehensive statement of the City's land use policies for the next 25 years. The Planning Commission's task relative to the CIP is to review the first year of the CIP and determine whether it conforms with the General Plan.

CONFORMANCE WITH THE GENERAL PLAN

Staff has conducted an audit of General Plan policies and has prepared the attached matrix (Attachment 4) to document how each proposed new or modified capital improvement conforms with the City's General Plan. In general, each CIP item implements a program or policy in the General Plan, which are identified by policy number and description for reference in the attached matrix.

The General Plan has a time frame spanning the next 19 years; however, the City Council prioritizes and allocates limited resources every year. Not all General Plan goals or plans may be funded during each year of the CIP. The City Council ultimately authorizes appropriations in the CIP preceded by the Planning Commission determining conformity with the General Plan. Staff has reviewed the proposed CIP and finds no evidence that it will preclude the City from accommodating the growth envisioned in the General Plan, or cause any growth-management thresholds to be exceeded. While a five-year future cost is forecast, the Council adopts fund allocations for a single-year CIP, so future years are not shown on the attached matrix.

FISCAL IMPACT

The projects identified in the CIP are funded through a variety of mechanisms including rates, development fees and bonds. Each project in the CIP document identifies the funding source(s) for that project to be allocated over the course of the five-year planning period. The City Council will authorize specific funding sources and amounts as part of the budget process, or at the time of individual project approval. Normally the Water CIP would be included as part of the normal budget process with Public Works CIP, but because of the necessity to fund projects due to the recent water bond issuance, the Water Department is bringing its CIP to Council separately.

ENVIRONMENTAL REVIEW

This action is exempt from the California Environmental Quality Act (CEQA) because it is not a project which has a potential for resulting in either a direct physical change in the environment, or a reasonably foreseeable indirect physical change in the environment, pursuant to CEQA Guideline Section 15378, therefore no further

review is required. CEQA review is conducted for individual projects at the time of project approval.

ATTACHMENTS

1.	Resolution 21-05
2.	FY 2021-22 New or Modified CIP Project Summary
3.	FY 2021-22 New or Modified CIP Projects by Fund
4.	General Plan - FY 2021-22 Water Department CIP Conformance Matrix
5.	Text of General Plan Policies Applicable to FY 2021-22 CIP Projects

CONTACT

Michael Malone Water Director (707) 648-4308
mike.malone@cityofvallejo.net

Jenn Hyman / Interim Water Engineering Manager, (831) 251-3626
jhyman@ekiconsult.com

ATTACHMENT 1

CITY OF VALLEJO PLANNING COMMISSION

RESOLUTION NO. PC 21-05

A RESOLUTION OF THE PLANNING COMMISSION FINDING THE PROPOSED WATER DEPARTMENT CAPITAL IMPROVEMENT PROGRAM FOR FISCAL YEAR 2021-22 TO BE IN CONFORMANCE WITH THE GENERAL PLAN

* *

BE IT RESOLVED by the Planning Commission of the City of Vallejo as follows:

WHEREAS, the City of Vallejo Water Department Capital Improvement Program (CIP) is a five-year program adjusted annually that outlines public improvements and estimated expenditures to construct these improvements; and

WHEREAS, a proposed Water Department CIP has been developed for the 2021-22 time period for City Council review and adoption; and

WHEREAS, California Government Code Section 65401 requires the City's Planning Commission to determine whether the "ensuing fiscal year" of the CIP (Fiscal Year, or FY, 2021-22 in this case) is in conformance with the City's General Plan, and to report its determination to the City Council; and

WHEREAS, on April 19, 2021, the Planning Commission held a public hearing on the proposed FY 2021-22 CIP.

NOW THEREFORE, the Planning Commission of the City of Vallejo hereby finds, determines and resolves as follows:

Section 1: The Planning Commission has duly considered the full record before it on this matter, which includes but is not limited to such things as the City staff report, the FY 2021-22 CIP, testimony by staff and the public (if any), and any other materials or evidence submitted or provided to the Commission. Furthermore, the recitals set forth above are found to be true and correct and are incorporated herein by reference.

Section 2: This action is not subject to the California Environmental Quality Act (CEQA) pursuant to CEQA Guidelines Section 15378, since it is not a "project" as defined under CEQA.

Section 3: The proposed Water Department FY 2021-22 CIP conforms with the Vallejo General Plan 2040.

PASSED AND ADOPTED at a regular meeting of the Planning Commission of the City of Vallejo, State of California, on the 19th of April, 2021, by the following vote to-wit:

AYES:
NOES:

ABSENT:

_____

Diosdado Matulac, Jr. CHAIRPERSON
City of Vallejo Planning Commission Attest:

_____

Christina Ratcliffe, SECRETARY
City of Vallejo Planning Commission

Attachment 2
City of Vallejo Water Department
Fiscal Year 2021-2022 New or Modified CIP Projects Summary

Line #	Fund No.	Project #	Project Name	New or Modified	New Appropriation
1	404	WT7115	MI BOOSTER PS STUDY	Modifed to expand assessment to include Swanzy Reservoir	$ 150,000
2	404	WT7118	WATER MAIN REPLACMT 21-22	New	$ 2,900,000
3	404	WT7119	WATER MAIN REPLACMT 22-23	New	$ 200,000
4	404 411	WT7120	ADVANCED METER INFRASTRUCTURE	New	$ 1,000,000
5	404, 411	WT7121	FH, PS & SUBSTA ELEC UPGRADES	New	$ 250,000
6	404	WT7122	BURNAM HYDRO PS UPGRADES	New	$ 100,000
7	404	WT7123	FH CLEARWELL REPAIRS	New	$ 100,000
8	404	WT7124	CALTRANS FAIRGROUNDS PIPELINE	New	$ 1,000,000
9	404, 410, 411	WT7125	LIMS FOR WQ LAB	New	$ 250,000
	Total				**$ 5,950,000**

Attachment 3
City of Vallejo Water Department
Fiscal Year 2021-2022 New or Modified CIP Projects by Fund

Line #	Fund No.	Fund Name	Project #	Project Name	New or Modified	New Apppropriation
1	404	City Water Systems	WT7115	MI BOOSTER PS STUDY	Modifed to expand assessment to include Swanzy Reservoir	$ 150,000
2	404	City Water Systems	WT7118	WATER MAIN REPLACMT 21-22	New	$ 2,900,000
3	404	City Water Systems	WT7119	WATER MAIN REPLACMT 22-23	New	$ 200,000
4	404	City Water Systems	WT7120	ADVANCED METER INFRASTRUCTURE	New	$ 950,000
5	404	City Water Systems	WT7121	FH, PS & SUBSTA ELEC UPGRADES	New	$ 237,500
6	404	City Water Systems	WT7122	BURNAM HYDRO PS UPGRADES	New	$ 100,000
7	404	City Water Systems	WT7123	FH CLEARWELL REPAIRS	New	$ 100,000
8	404	City Water Systems	WT7124	CALTRANS FAIRGROUNDS PIPELINE	New	$ 1,000,000
9	404	City Water Systems	WT7125	LIMS FOR WQ LAB	New	$ 212,500
	subtotal Fund 404					**$ 5,850,000**
9	410	Lake Water Systems	WT7125	LIMS FOR WQ LAB	New	$ 12,500
	subtotal Fund 410					**$ 12,500**
4	411	Lake Water Systems	WT7120	ADVANCED METER INFRASTRUCTURE	New	$ 50,000
5	411	Lake Water Systems	WT7121	FH, PS & SUBSTA ELEC UPGRADES	New	$ 12,500
9	411	Lake Water Systems	WT7125	LIMS FOR WQ LAB	New	$ 25,000
	subtotal Fund 411					**$ 87,500**
	TOTAL					$ 5,950,000

Attachment 4
General Plan - FY21-22 Water Department CIP Conformance Matrix

#	Category	Project ID	Project Name	Description	Location	Vallejo General Plan 2040		
						Chapter	Topical Area	Applicable Goals/Policies (all are policies unless otherwise noted)
1	Water	WT7115	Mare Island Booster Pump Station Study	This project initially consisted of adding a booster pump station to the Mare Island Tank to improve pressure problems for several nearby commercial customers. This project is being modified to also examine alternatives for the removal or replacement of Swanzy Reservoir, an aging oversized reservoir that provides water to the Mare Island Tank.	Downtown Vallejo and Mare Island	Community and People	Clean Water	POLICY CP-1.13 (Action CP-1.13A, Action CP-1.13B)
2	Water	WT7118	Water Main Replacement Project FY 21-22	Annual replacement of pipes in the distribution system. FY21-22	Citywide	Community and People	Clean Water	POLICY CP-1.13 (Action CP-1.13A, Action CP-1.13B)
3	Water	WT7119	Water Main Replacement Project FY 22-23	Annual replacement of pipes in the distribution system. FY22-23	Citywide	Community and People	Clean Water	POLICY CP-1.13 (Action CP-1.13A, Action CP-1.13B)
4	Water	WT7120	Advanced Meter Infrastruture	This project will add automated meter reading to the water meters in the City system. This new system will provide a safer way for the department to read meters, increase water conservation and provide more accurate water consumption data.	Citywide	Economy, Education & Training	Municipal Services	POLICY EET-1.8 Municipal Services (Action EET-1.9A)
5	Water	WT7121	Fleming Hill WTP, Pump Stations and Substation Electrical Upgrades	This project involves upgrades to the electrical, control and power equipment that are required due to the equipment being outdated and not up to current safety codes.	Citywide	Community and People	Clean Water	POLICY CP-1.13 (Action CP-1.13A, Action CP-1.13B)
6	Water	WT7122	Burnam Hydropneumatic Pump Station System Upgrades	This project will consist of repairs to the pump station and hydropneumatic tank resulting from the age of this critical facility.	Downtown Vallejo	Community and People	Clean Water	POLICY CP-1.13 (Action CP-1.13A, Action CP-1.13B)
7	Water	WT7123	Fleming Hill Clearwell Repairs	This project consists of design and construction of repairs to a hole in the clearwell roof which stores treated potable water. The hole repair is required to meet drinking water codes.	Fleming Hill Water Treatment Plant	Community and People	Clean Water	POLICY CP-1.13 (Action CP-1.13A, Action CP-1.13B)
8	Water	WT7124	Caltrans Fairgrounds Pipeline	Caltrans is planning to reconstruct the diamond interchange between Hwy 80 and 37 near the Fairgrounds. This project coorinates with Caltrans to have their consultant design a water main in their project to cross the highway and provide redundant looping of the water system, enhancing reliability.	Hwy 80/37 interchange	Community and People	Clean Water	POLICY CP-1.13 (Action CP-1.13A, Action CP-1.13B)

Attachment 4
General Plan - FY21-22 Water Department CIP Conformance Matrix

#	Category	Project ID	Project Name	Description	Location	Vallejo General Plan 2040		
						Chapter	Topical Area	Applicable Goals/Policies (all are policies unless otherwise noted)
9	Water	WT7125	LIMS for Water Quality Lab	This project consists of purchase and implementation of a Laboratory Information System (LIMS) to organize and store water quality data at the water quality laboratory.	Fleming Hill Water Treatment Plant	Community and People	Clean Water	POLICY CP-1.13 (Action CP-1.13A, Action CP-1.13B)

ATTACHMENT 5

GENERAL PLAN 2040 POLICIES RELATED TO CAPITAL IMPROVEMENTS, PUBLIC FACILITES AND INFRASTRUCTURE

Chapter 3 – Community & People

POLICY CP-1.4 Active Recreation Facilities. Ensure all Vallejo residents are served by convenient and safe active recreation facilities that meet the needs of all ages, abilities, and interest groups.

- *Action CP-1.4A. Include active recreation opportunities for a range of ages and interests as considerations in planning and projects for the central waterfront and shoreline areas.*

POLICY CP-1.6 Active Transportation Network. Promote the health benefits of walking and bicycling by providing a convenient and safe network of bicycle paths and routes, sidewalks, pedestrian paths, and trails, including connections with major destinations such as civic facilities, educational institutions, employment centers, shopping, and recreation areas.

- *Action CP-1.6A. Identify problem locations in Vallejo regarding pedestrian/auto and bicycle/auto collisions, identify measures (e.g., traffic calming, improved street lighting) to reduce collisions, and develop a prioritized program for implementing identified measures.*

- *Action CP-1.6B. Support and expand Vallejo's Safe Routes to Schools program in collaboration with the VCUSD, Vallejo Police Department, Solano Public Health, and Solano Transportation Authority (STA).*

- *Action CP-1.6D. Develop guidelines for public and private projects that promote safe, convenient, and attractive bike and pedestrian facilities, including amenities to enhance bike and pedestrian activity, such as bicycle racks, lockers, street trees, public art, and street furniture.*

POLICY CP-1.7 Green Space. Promote community physical and mental health through provision and preservation of the urban forest, natural areas, and "green" infrastructure (i.e. best practices water management).

- *Action CP-1.7A. Seek funding to develop and implement an Urban Greening Plan that identifies needs, opportunities, projects, and potential funding, in collaboration with community partners.*

- *Action CP-1.7E. Continue to implement green infrastructure practices that draw upon natural processes to address storm water drainage and flood control and potentially add to Vallejo's network of green spaces.*

POLICY CP-1.13 Clean Water. Provide a safe, adequate water supply citywide.

- *Action CP-1.13A. Periodically assess the need to repair or replace aging water supply infrastructure, and incorporate upgrades and improvements into the Capital Improvement Program as needed.*

- *Action CP-1.13B. Develop a plan to upgrade and finance water infrastructure improvements.*

POLICY CP-1.15 Water Quality. Maintain and improve water quality in a way that provides public and environmental health benefits.

- *Action CP-1.15A. Require new development to incorporate site design, source control, and treatment measures to keep pollutants out of stormwater during construction and operational phases, consistent with City of Vallejo Municipal Ordinance.*

- *Action CP-1.15C. Consult with appropriate regional, State, and federal agencies to monitor water quality and address local sources of groundwater and soil contamination, including possible underground storage tanks, septic tanks, and industrial uses, as necessary, to achieve State and federal water quality standards.*

Goal CP-2. Safe City: Protect personal safety in Vallejo's neighborhoods and public spaces.

POLICY CP-2.1 Police Services. Provide responsive, efficient, and effective police services that promote a high level of public safety.

- *Action CP-2.1E. Periodically review response capabilities to determine potential need for additional law enforcement facilities, equipment, or personnel, and identify specific geographic areas requiring expanded services.*

- *Action CP-2.1F. Address the need for a new public safety facility site and building to replace the aging Police Department Facility through a feasibility study and seek out funding opportunities. Identify a suitable location centrally located within easy access to major thoroughfares and freeways.*

POLICY CP-2.3 Fire Prevention and Response Services. Ensure the provision of fire prevention and emergency response services that minimize fire risks and protect life and property.

- *Action CP-2.3A. Periodically review response times to gauge the need for additional VFD facilities, equipment, and personnel, and identify specific geographic areas of the city that may not be adequately served.*

POLICY CP-3.2 Neighborhood Focal Points. Promote school facilities that serve as neighborhood focal points where residents and families come together.

- *Action CP-3.2A. Work with VCUSD, private schools, public agencies, and community service providers to identify opportunities to collocate community facilities with schools, so that multiple services may be delivered from a single location.*

POLICY CP-3.4 Parks. Plan for and provide parkland and facilities to support Vallejo's recreational needs.

- *Action CP-3.4A. Maintain a standard of 4.25 acres of parkland per thousand residents and continue to require that new residential development make a fair share contribution to future parks development.*

- *Action CP-3.4B. Work with GVRD, VSFCD, and other community partners to identify potential sites for new parks, playgrounds, recreation centers, sports fields, skate parks, and other recreational facilities in underserved areas as well as in areas where population growth is anticipated*. Collaborate to explore funding mechanisms for acquisition and maintenance of new parks and facilities.

POLICY CP-3.5 Parks Maintenance. Maintain and improve parks and facilities in Vallejo.

- *Action CP-3.5A. Consider ways to increase funding for park maintenance, including a park impact fee applicable to commercial development.*

POLICY CP-3.6 Park Safety. Ensure that parks are designed and managed to maximize the personal safety of users and maintain the visibility of play areas.

- *Action CP-3.6B. Work with GVRD to periodically conduct CPTED audits of park facilities to identify and prioritize improvements that can enhance safety.*

Chapter 4 – Nature & Built Environment

Goal NBE-1. Beautiful City: Preserve and enhance the natural, historic, and scenic resources that make Vallejo special.

POLICY NBE-1.5 Scenic Vistas. Protect and improve scenic vistas, including views from Interstate 80 and State Route 37 in Vallejo.

POLICY NBE-1.7 Green Infrastructure. Encourage the installation of green infrastructure, including tools such as permeable pavement, rain gardens, constructed wetlands, grassy swales, rain barrels and cisterns, and green roofs, to treat stormwater, attenuate floods, increase groundwater recharge, and reduce urban heat islands.

POLICY NBE-1.9 Cultural Resources. Protect and preserve archaeological, historic, and other cultural resources.

POLICY NBE-2.4 Play to Strengths. Capitalize on Vallejo's maritime tradition, higher education presence, and historic downtown to keep and attract land use activities that contribute positive energy to the community.

- *Action NBE-2.4A. Continue to use the Mare Island Specific Plan to guide development and conservation on Mare Island and support activities that contribute to the economic and social well-being of the community.*

POLICY NBE-2.5 Regional Retail and Entertainment. Support a thriving mix of regional retail and entertainment uses near Interstate 80.

- *Action NBE-2.5A. Work with property owners in the Northgate Area to retain and attract businesses that cater both to local residents and regional shoppers, including through circulation and wayfinding improvements.*

POLICY NBE-2.8 Infill Development. Promote infill development targets vacant and underutilized sites for community-desired and enhancing uses that is compatible with surrounding uses.

POLICY NBE-2.9 Public Service Provision. Ensure that private development provides sufficient funding for infrastructure and public services to support the development.

- *Action NBE-2.9A. Require fiscal impact analyses, as appropriate, for development proposals in order to evaluate public facility needs and costs, and the revenue likely to be generated by that development.*

- *Action NBE-2.9B. Continue to facilitate establishment of assessment districts to finance and maintain public facility improvements.*

- *Action NBE-2.9C. Maintain and update a list of potential, proposed, and approved projects in the city, and report annually the number of housing units and the amount of non-residential development constructed or rehabilitated.*

- *Action NBE-2.9D. Periodically update nexus studies and adjust development impact fees as may be needed to ensure that there is sufficient funding for the infrastructure and public services needed to support growth.*

- *Action NBE-2.9E. Engage the Vallejo City Unified School District (VCUSD) in the review of major new residential development projects to ensure that adequate school facilities are or will be available to accommodate new students.*

POLICY NBE-4.1 Waterfront Focus. Prioritize public access and recreational and water-dependent uses along the waterfront while minimizing adverse effects on the natural environment.

- *Action NBE-4.1B. Investigate and provide access to places for in-water recreational activities and for commercial and recreational small crafts, such as water taxis, canoes, and kayaks.*

POLICY NBE-4.3 Trails. Support development and implementation of a comprehensive plan for trails that provides access to the waterfront.

- *Action NBE-4.3A. Facilitate development of a promenade and trail, along the waterfront or as close to the waterfront as feasible, extending from the Zampa Bridge in South Vallejo north to River Park and White Slough.*

- *Action NBE-4.3B. Identify priority scenic views and points of interest along the waterfront and potential connections to surrounding destinations.*

- *Action NBE-4.3C. Seek funding for infrastructure improvements, landscaping, and outdoor amenities to increase pedestrian, bike, and transit access to the water and build linkages to downtown Vallejo.*

POLICY NBE-4.5 Waterfront Stewardship. Manage commercial areas of the waterfront so as to contribute to the overall sustainable fiscal health of the City.

- *Action NBE-4.5A. Create a phased Waterfront Capital Improvement Program that identifies projects and estimates operational and maintenance costs.*

POLICY NBE-5.1 Event Readiness. Prepare sufficiently for major events to enable quick and effective response.

- *Action NBE-5.1E. Periodically update the City's Capital Improvement Program to include improvements that will expedite emergency response.*

POLICY NBE-5.4 Project Location and Design. Prohibit development in any area where it is determined that the potential risk from natural hazards cannot be mitigated to acceptable levels.

- *Action NBE-5.4D. Locate public facilities that are critical to health and safety (such as police and fire stations, and water and sewer facilities) so as to minimize potential impacts from hazards.*

POLICY NBE-5.6 Flood Control Planning. Protect the community from potential flood events.

- *Action NBE-5.6F. Work with FEMA to evaluate levees on the western side of Mare Island to enhance the embankments, as necessary.*

POLICY NBE-5.7 Design for Stormwater Control. Encourage new development and redevelopment to minimize the area of new roofs and paving.

- *Action NBE-5.7A. Provide informational materials that promote the use of permeable materials for driveways, streets, parking lots, sidewalks, and plazas.*

- *Action NBE-5.7B. Continue to manage and maintain City-owned storm drainage infrastructure to avoid flooding and reduce the negative effects of stormwater runoff.*

POLICY NBE-5.8 Dam Safety. Ensure that City-operated dams are properly maintained through regular inspections, and take precautions necessary to protect Vallejo properties from related flood hazards in the event of dam failure.

- *Action NBE-5.8A. Work with the California Division of Dams (CDOD) and California Office of Emergency Services (CalOES) in the update of dam inundation maps and Emergency Action Plans (EAPs), as needed, for the dams operated by the City of Vallejo.*

POLICY NBE-5.9 Sea Level Rise. Plan for sea level rise and participate in regional adaptation efforts for areas of Vallejo at risk from sea level rise.

- *Action NBE-5.9A. For City underground utilities, use materials that are more resistant to corrosion from saltwater intrusion.*

- *Action NBE-5.9B. Seek funding to develop and implement sea level rise adaptation strategies and projects.*

- *Action NBE-5.9C. In consultation with Solano County and the San Francisco Bay Conservation and Development Commission (BCDC), develop a Sea Level Rise Strategy that identifies properties and resources susceptible to sea level rise and includes protection and adaptation strategies, based on the latest sea level rise planning guidance from the State.*

Chapter 5 – Economy, Education, & Training

POLICY EET-1.1 Premier Manufacturing Site. Make Vallejo a premier regional site for manufacturing, including basic and advanced fabrication, clean-tech, and green-tech industries. Work with Solano Economic Development Corporation (EDC) to Action EET-1.1Aattract manufacturers in sectors such as food and beverage, life-science, clean technology, green technology, and other industries that will provide high quality jobs.

- *Action EET-1.1B. Prioritize North Mare Island for development, such as a manufacturing use, including facilitating infrastructure investment and state and regional incentives for job creation.*

POLICY EET-1.3 Visitor Destination. Make Vallejo an important visitor destination in the Bay Area. Collaborate with Visit Vallejo to enhance the tourism economy, Action EET-1.3Aincluding a multi-faceted strategy that includes arts, culture, history, lodging, and entertainment.

- *Action EET-1.3B. Promote Vallejo's rich naval heritage and support development of a naval tourist attraction on Mare Island.*

POLICY EET-1.8 Public Investments. Leverage public investments to enhance Vallejo's economic vitality, and invest resources in ways that ensure that Vallejo is a healthy, safe, and engaged community.

- *Action EET-1.8A. Continue to balance revenues with expenditures to maintain and enhance Vallejo's fiscal sustainability.*

- *Action EET-1.8B. Consider identifying and setting aside funds that can be used as local match funds to solicit grants and non-traditional funding for priority projects not otherwise feasible.*

- *Action EET-1.8C. Ensure that the Capital Improvement Plan identifies and prioritizes infrastructure needs to be supported by new development.*

POLICY EET-1.9 Municipal Services. Provide robust, high-quality municipal services and build revenue to achieve a self-sustaining model of funding.

- *Action EET-1.9A. Continue to partner with public agencies to enhance Vallejo's infrastructure, including active transportation and transit connections and facilities, and services needed for new development and investment.*

POLICY EET-1.10 Public Land. Improve City-owned land and properties to stimulate private investment in employment and high-quality commercial, residential, and mixed-use development.

- *Action EET-1.10D. Identify opportunities to co-locate public facilities to achieve economies of scale and create convenient neighborhood service centers for Vallejoans.*

POLICY EET-3.2 Local Business Retention. Retain existing businesses and encourage their expansion within Vallejo.

- *Action EET-3.2A. Continue implementing an active business retention and expansion program for existing businesses, recognizing that the majority of new local jobs are created among existing firms.*

POLICY EET-3.5 Fiber Optics. Establish a Municipal High-Speed Fiber Optic Network to support enhanced telecommunications capacity of the City.

- *Action EET-3.5A. Adopt a Fiber Optic Master Plan for Vallejo to galvanize the citywide traffic signal fiber network and provide service to public agencies, educational institutions, medical facilities, and businesses.*

- *Action EET-3.5B. Incorporate telecommunications conduit in all public infrastructure projects, where appropriate and feasible, affording connections to local area networks, including the City's Fiber Optic Network.*

POLICY EET-4.2 Responsible Development. Favor residential, commercial, and industrial development that can mitigate or avoid environmental impacts.

- *Action EET-4.2A. Continue to incorporate sustainable design elements such as solar panels and water efficient landscaping into the construction of City-owned and operated facilities.*

Chapter 6 – Mobility, Transportation, & Connectivity

POLICY MTC-1.3 First/Last Mile Connections. Provide enhancements to the local transit network that make it easier and more convenient to use regional transit.

- *Action MTC-1.3A. Pursue One Bay Area grants and other funding to better connect regional transit and the local bicycle and pedestrian network, including through physical infrastructure, wayfinding signage, and real-time information displays.*

POLICY MTC-2.1 Safety First. Prioritize pedestrian, bicycle, and automobile safety over traffic flow.

- *Action MTC-2.1A. Prepare a citywide Bicycle and Pedestrian Master Plan that builds on the 1998 Plan, identifies improvements needed to close gaps in the network and work toward a "Vision Zero" target for eliminating traffic fatalities and reducing non-fatal collisions.*

- *Action MTC-2.1B. Prioritize completion of sidewalk and bicycle projects listed in the Bicycle and Pedestrian Master Plan as City resources allow.*

- *Action MTC-2.1C. Establish a neighborhood traffic-calming program to involve residents in identifying issues on neighborhood streets and actions to address them.*

POLICY MTC-2.2 Education. Promote safety programs to educate all road users about risks and responsibilities.

- *Action MTC-2.2C. Prioritize school access improvements identified by the Vallejo Police Department (VPD) in the City's Capital Improvement Program for near-term action.*

POLICY MTC-2.4 Citywide Mobility. Maintain a transportation network that provides mobility for all ages and abilities and for all areas of the community.

- *Action MTC-2.4A. Annually update and prioritize the Capital Improvement Program list of roadway and transportation improvements needed to support all modes of travel in Vallejo.*

POLICY MTC-2.6 Pavement Condition. Improve street pavement condition in Vallejo, prioritizing neighborhood corridors and arterials.

- *Action MTC-2.6A. Target neighborhood corridors, commercial corridors, and arterial segments that have a pavement condition index (PCI) of 50 or less and enhance economic development opportunities as top priorities and seek funding for improvements.*

POLICY MTC-2.7 Complete Streets. Increase accessibility for and use of streets by pedestrians, bicyclists, and transit riders.

- *Action MTC-2.7A. Investigate preparing and refining a Complete Streets map, classifying and prioritizing streets for alternative modes of transport.*

- *Action MTC-2.7B. Seek funding to improve sidewalk conditions, including widening of substandard sidewalks and adding street trees and lighting.*

- *Action MTC-2.7D. Adopt the National Association of City Transportation Officials (NACTO) Urban Street Design Guide and Urban Bikeway Design Guide to direct future improvement projects.*

- *Action MTC-2.7E. Factor in bus operational and access needs when considering the location, planning, and design of site improvements, considering such factors as bus operational needs, proximity of building to streets, and provision of sidewalks, supporting an efficient, reliable, and safe transit system accessible to all.*

POLICY MTC-2.11 Sustainable Transportation. Ensure that circulation improvements can be operated and maintained within existing and future resource limitations.

- *Action MTC-2.11A. Annually review transportation projects in the City's Capital Improvement Program to ensure that near-term priorities are achievable given available resources.*

POLICY MTC-2.13 Alternative Fuel Vehicles. Utilize alternative fuel vehicles as much as feasible.

- *Action MTC-2.13A. Work with the Solano Transportation Authority (STA) and other partners to install electric vehicle charging stations in all City-owned parking facilities downtown and at major parking facilities and employment centers.*

- *Action MTC-2.13B. Work with public transportation agencies, such as the Solano Transportation Authority and Soltrans, to develop a strategy to implement a network of public and private alternative fueling stations, such as electric vehicle charging stations and stations providing compressed natural gas (CNG).*

POLICY MTC-3.1 Coordinated Transportation Planning. Ensure that improvements to the transportation network support a land use pattern that connects the community and facilitates travel among Vallejo's neighborhoods.

- *Action MTC-3.1A. Work with Caltrans, Solano County, Soltrans, and the Solano Transportation Authority to identify and seek funding for improvements that make intra-city travel easier, including for transit, bicycles, and pedestrians.*

- *Action MTC-3.1B. Synchronize improvements to the local street network with planned expansion of the County bicycle network and the regional trail system in Vallejo.*

- *Action MTC-3.1C. Involve residents, businesses, and other community members in choosing among options for street improvement projects to create a stronger sense of place and neighborhood ownership in the design of roads, streetscapes, and other transportation related facilities.*

POLICY MTC-3.4 Walking, Biking, and Rolling. Expand the local bicycle and trail network to provide safe, healthy, attractive options for non-motorized travel among destinations in Vallejo, including for wheelchair users.

- *Action MTC-3.4A. Where appropriate and feasible, convert underused City rights-of-way to bikeways along travel lanes, drainage canals, and rail corridors, to enhance connectivity.*

- *Action MTC-3.4B. Pursue public and private funding to expand and link the network of pedestrian and bicycle paths and facilities beginning in selected transit-oriented priority areas.*

- *Action MTC-3.4C. Regularly maintain key neighborhood connection routes to facilitate bicycle access, including through debris removal and street repair.*

POLICY MTC-3.5 Walkability. Promote a well-designed, interconnected, pedestrian-friendly environment in the Downtown/Waterfront District.

- *Action MTC-3.5A. Continue to improve the pedestrian realm connecting downtown with the waterfront and along the waterfront on both sides of the Mare Island Strait, consistent with the Waterfront Planned Development Master Plan and the Mare Island Specific Plan.*

POLICY MTC-3.7 Shared Streets. Facilitate access to and through the District by alternatives to the automobile.

- *Action MTC-3.7A. Establish shared streets within the Downtown/Waterfront District that accommodate bicycles and transit through provision of dedicated lanes where appropriate.*

POLICY MTC-3.9 Sufficient Parking. Provide for sufficient but not excessive parking.

- *Action MTC-3.9C Design parking lots, where feasible, to include clearly marked and shaded pedestrian pathways between transit facilities and building entrances.*

- *Action MTC-3.9D Develop a central parking facility, consistent with the Downtown Specific Plan.*

POLICY MTC-3.10 Boating. Support recreational boating in Vallejo and foster the development of commercial boating activities, including dinner cruises and water taxis.

- *Action MTC-3.10A. Operate the Municipal Marina in a financially viable manner.*

- *Action MTC-3.10B. Seek funding for marina operations and maintenance, including needed dredging within the existing harbor.*

Staff Reports

STAFF REPORT
CITY OF VALLEJO
PLANNING COMMISSION

I. PROJECT INFORMATION

Item No. 12-A

DATE OF MEETING:	April 19, 2021
PROJECT NUMBER:	Site Development (SD) 19-0004
PREPARED BY:	Cesar Orozco, Associate Planner
PROJECT LOCATION:	1888 Broadway / APN: 0052-090-170, -210, -220, -230
APPLICABLE ZONING CODE SECTION(S):	Site Development Permit (Vallejo Municipal Code Chapter 16.90)
PROJECT SUMMARY:	The project is a request for Site Development approval for the upgrading of a concrete batch facility, which is an accessory use to a landscaping business. The equipment was upgraded without benefit of permits. The maximum height of the equipment is 59-feet, 4-inches. No increase in concrete output is proposed.
CEQA DETEMINATION:	The project is categorically exempt pursuant to Section 15303 and 15311 of the California Environmental Quality Act (CEQA) Guidelines (Class 3: "New Construction or Conversion of small structures" and Class 11: "Accessory Structures"). Therefore, no further environmental review is required.
RECOMMENDATION:	Staff recommends that the Planning Commission adopt Resolution No. PC 21-xx to **APPROVE** UP#19-0004.

PROJECT DATA SUMMARY

APPLICANT:	Bunty Sidhu 39 Crawford Way American Canyon, CA 94503
PROPERTY OWNER:	Balwinder K. Sidhu 39 Crawford Wat American Canyon, CA 94503
GENERAL PLAN DESIGNATION:	Business / Light Industrial (B/LI)
ZONING DISTRICT:	Intensive Use (IU)

EXISTING LAND USE:	Construction Sales and Services
SURROUNDING LAND USE:	North – Tuolumne Street/Commercial/Residential South - Vacant Land/Residential East – Rail Road / Almond Avenue / Residential West – Broadway Street / Commercial / Residential
LOT AREA:	APN: - 0052-090-170: 1.05 Acres (45,560 square feet) - 0052-090-210: 1 Acre (43,560 square feet) - 0052-090-220: 0.95 Acre (41,434 square feet) - 0052-090-230: 0.96 Acre (41,756 square feet) - Total: 3.9 Acres (172,219 square feet)
TOTAL FLOOR AREA:	2,772 square feet for equipment foundation (21,780 square feet for existing building)
PARKING REQUIREMENTS/ PROVIDED:	6 spaces / 6 spaces

II. PROJECT DESCRIPTION

A. Background

Bunty Sidhu, the applicant and operator, submitted an application for a Site Development to legalize the upgrading of an existing concrete batch facility which is an accessory use for the existing landscaping business, located at 1888 Broadway. The upgrading was done without benefit of permit. The timeline for the application is as follows:

Table 1 – Project Timeline

Date	Action / Event
February 7, 2019	The applicant Bunty Sidhu, filed an application for a Site Development Permit.
February 22, 2019	The project plans were routed to various agencies for interdepartmental review and comment.
March 8, 2019	Staff sent a Permit Streamlining Act Letter to the applicant requesting additional information to be submitted.
October 3, 2019	The applicant resubmitted plans addressing staff's comments. The project plans were routed to various agencies for interdepartmental review and comment.
November 1, 2019	Staff sent a Permit Streamlining Act Letter to the applicant requesting additional information to be submitted.
December 28, 2020	The applicant resubmitted plans addressing staff's comments.
January 4, 2021	The project plans were routed to various agencies for interdepartmental review and comment.
January 28, 2021	The application was deemed complete for processing and staff confirmed via email.
April 8, 2021	A public notice was sent to the Planning Commission (PC), all active neighborhood groups within 500 feet of the subject property, property owners within 200 feet of the subject property, and to the applicant.

Required Permits

The project requires the following approval under the Vallejo Municipal Code (VMC):

Table 2 – Required Permits			
Permit Type	**Description**	**VMC Code Section**	**Review Authority**
Site Development Permit	The upgrading of a concrete batch facility, which is an accessory use to a landscaping business.	16.34.020(B.9)	Development Services Director

Per Section 16.90.050 (D) of the Vallejo Municipal Code (VMC), whenever the Development Services Director (Planning and Development Services Director) finds that the decision on any application is beyond their purview of authority, the application shall be forwarded to the Planning Commission for its determination. Due to the heightened level of community concern, as well as the entitlement history of the site (see below), the Director has forwarded this project to the Planning Commission for action. In addition to this entitlement, this project will require a building permit from the City of Vallejo.

Other Agency Review

This use is also subject to review by the Solano County's Department of Resource Management. Due to the size and capacity of the concrete batch facility, it is exempt from review by the Bay Area Air Quality Management District. These agencies and their jurisdictions are discussed later in this report.

The site is currently occupied by Crown Hill Materials; a business that provides landscaping materials, decorative rock, ready mix concrete, masonry supplies and stone products. Crown Hill Materials has occupied this site for 19 years. The site currently has a 1,380 square-foot office building and a 19,900 square-foot warehouse. According to the City's business license system, the current operator has owned the business since 2008.

Entitlement History

- In 2001, the City of Vallejo Planning Division granted a Site Development to construct 75-foot tall monopole with 12 unmanned telecommunications antenna.
- In 2003 the City of Vallejo Planning Division granted a Site Development (SD) to install a 59-foot and 10-inch concrete blender (see Figure 1). This facility was installed however a final inspection was not completed and landscape screening required as a Condition of Approval was never installed.
- In 2019, the City of Vallejo was notified that new equipment was being installed on the site.
- Based on a code enforcement investigation, this Site Development permit was submitted on February 7, 2019.

Code Enforcement

In early 2019, staff received complaints from neighboring residents about the business operations. The main issues were related to noise and potential airborne cement dust. Staff has worked with the business on each of these issues, as discussed below.

Noise. In response to noise concerns, the business owner provided staff a letter of sound levels of the equipment from six different locations around the site. The maximum sound level produced from the equipment is 74 decibels. Per section 16.72.030 of the VMC, no land use within the IU zoning district, shall

generate sound exceeding 75 decibels. Staff determined that the business was compliant with the allowable decibel for the applicable zoning district.

Dust. The VMC addresses dust concerns through screening mitigations and those remedies are listed as proposed conditions of approval later in this staff report. They include fencing and landscaping buffers. Dust, as a possible health issue is under the jurisdiction of the Bay Area Air Quality Management District (BAAQMD). The business owner informed staff that the upgraded facility includes a new dust collection system which processes the collected materials and recycles back into reusable product. Staff contacted BAAQMD and were informed that the operations are exempt from permitting as the product production facilities are less than 15 cy^3 per hour. A copy of this correspondence is included as Attachment 4.

Location and Land Use Context

The project site is located on a through lot between Broadway Street and Almond Avenue, along Tuolumne Street. It is surrounded by existing commercial and residential uses:

Table 3 – Surrounding Uses	
Direction	**Land Uses**
North	Tuolumne Street with Commercial and Single-family residences on the other side.
East	Rail Road right-of- way Almond Ave Single-family Residential
South	Vacant Lot Single-Family Residences
West	Broadway Street Commercial Mix of Housing Types

Sonoma Boulevard (Highway 29) is located approximately a quarter mile to the west and Kaiser Permanente Vallejo Medical Center is located approximately a three-quarters of a mile to the south. The immediate vicinity of the project site is characterized by existing commercial, industrial, and residential land uses. The site's General Plan land use designation is Business/Light Industrial (B/LI) and it has a zoning designation of Intensive Use (IU). The new proposed zoning district for the subject site is Limited Industrial (LI).

On August 29, 2017, the City Council adopted the Interim Zoning Policy (IZP) to facilitate development that is consistent with General Plan 2040 prior to the adoption of the new Zoning Ordinance. Under the Interim Zoning Policy, General Plan 2040 land use designations correlate to existing zoning districts for the purpose of applying development regulations in reviewing projects. The IZP has predetermined that the land use designation of B/LI is consistent to the IU zoning district.

Figure 1 – Vicinity Map

B. Project Description

The proposed project consists of a Site Development permit to legalize upgrades to a concrete batch facility, an accessory use to the existing landscape business. The equipment was upgraded without benefit of permits.The applicant informed staff that the facility was upgraded to meet seismic requirements, decrease dust production and improve air quality. The upgraded facility is made up of six pieces of equipment: a feed hopper, a radial stacker, two silos, an aggregated storage bin and a new dust collection system. The maximum height of the equipment is 59 feet and four inches.

The upgraded facility will output 16 cubic yards (cy^3) a day and the rate of 12 cy^3 an hour. The applicant noted this is in keeping with the existing operations of the previous equipment. The business will continue to operate from 8 a.m. to 5 p.m., Monday to Saturday and will continue to have a total of 11 employees. Two of the 11 employees operate the concrete batch facility. The current operation is expected to have a total of two cement powder deliveries per month and will continue to have two cement mixer truck trips per day. The delivery trucks and cement mixer trucks will continue to use the same truck route of heading north on Broadway Street, turning west on Lewis Brown Drive, and then north on Sonoma Boulevard (Highway 29) and enter onto Highway 37. The upgraded facility produces a maximum noise level of 74 decibels, as noted in the section above.

The proposed site plan currently shows minor improvements to the current property. The subject site currently has a six-foot tall chain link fence along the north, west, and south property lines and an eight-foot masonry wall along the east property line.

In response to the conditions of approval that were not met from the 2003 Site Development permit approval, approximately, 2,618 square feet of new sidewalk, curb and gutter will be installed parallel to Broadway Street and the west property line and a new 4,000 square-foot concrete slab will be installed at the entrance of the subject site to prevent any debris from the site to head onto the public right-of-way. New landscaping will also be provided along Broadway Street, including four street trees, shrubs and ground covering (see figure 2). Staff has added a condition of approval to install street trees in a one to fifty feet of street frontage along all street facing frontages.

Figure 2 – Proposed Site Plan

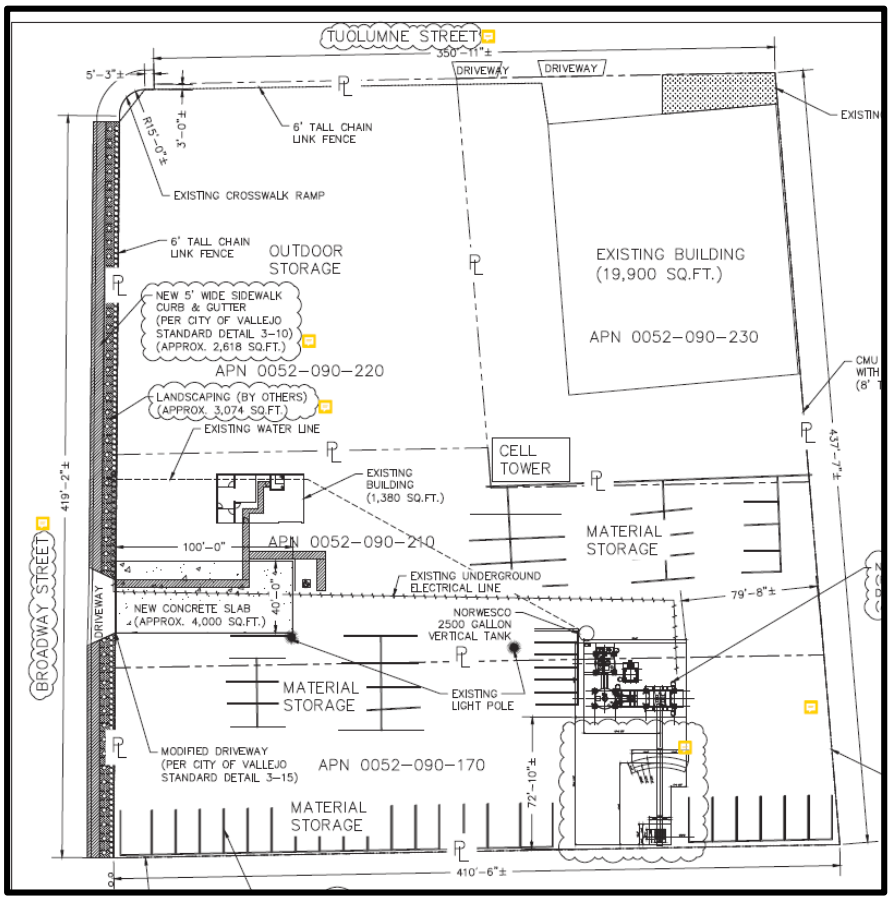

III. STAFF ANALYSIS

General Plan Consistency

The General Plan 2040 Land Use Designation for the subject property is Business/Light Industrial (B/LI). The General Plan characterizes this designation as follows:

> "The B/LI designation is intended to facilitate light industrial activities, including light manufacturing, warehousing and logistics; assembly; automotive service and maintenance, including auto body and painting operations; research and development; and production, distribution and repair (PDR) uses. Some light industrial and similar uses may include exterior storage areas. Professional office uses can also be accommodated in this designation. Secondary and accessory uses such as

banks, cafes, printers, and office supply stores to serve the needs of employees and businesses are also encouraged. The maximum permitted FAR in the BLI designation is 2.5."[1]

The project is consistent with the B/LI land use designation in that it involves upgrading of a concrete batch facility, which is an accessory use to a landscaping business. The upgraded equipment will meet seismic requirements and decrease dust production. The landscaping materials will continue to be stored outside. In addition to the improvements from the 2003 Site Development permit, staff is requiring additional landscaping and a new masonry wall, as conditioned, to screen the property from public view. Therefore, the proposed project will not adversely affect the land uses in close proximity.

The project is also consistent with applicable General Plan 2040 policies and actions. Key policies and actions relevant to the project are shown in **bold**, followed by staff's analysis in *italic*:

Table 4 - General Plan 2040 Policies and Actions	
Policies and Actions	**Staff's Analysis**
Policy NBE-1.8 Urban Forest. Encourage planting of street trees and landscaping to beautify the City, encourage walking and biking and create a stronger sense of identity.	- *Project involves the planting of new street trees, shrubs and groundcover.* - *Project contributes to the beautification of Vallejo and creates a stronger sense of identity.*
Policy EET-3.2 Local Business Retention. Retain existing business and encourage their expansion within Vallejo.	- *Providing a process to allow growth and upgrades to existing businesses.*
Policy NBE-2.3 Inviting, Compatible Design. Promote attractive development that is compatible with surrounding uses	- *Providing landscape and hardscape elements allows for buffers between industrial and residential uses.*

<u>Interim Zoning Determination</u>

On August 29, 2017, the City Council adopted the Interim Zoning Policy (IZP) to facilitate development that is consistent with General Plan 2040 until the new zoning code is adopted. Under the IZP, each General Plan 2040 land use designation correlates to the City's existing zoning districts and specific plans for the purposes of applying land use and development standards to a proposal.

The IZP identifies the following zoning districts as consistent with the Business/Light Industrial (B/LI) designation:

[1] General Plan 2040, page 2-21

- Intensive Use (IU)
- Intensive Use - Limited (IUL)
- Neighborhood Shopping and Service District (CN)
- White Slough Specific Plan

The project site is identified as Intensive Use (IU) District on the City's existing zoning map as well as the proposed zoning map and is consistent with the project.

The IU District is the "best fit" zoning designation for the use, and is also consistent with existing and proposed zoning designations.

The project is consistent with the applicable development standards outlined in Title 16 of the Vallejo Municipal Code, as proposed. This includes VMC Chapter(s) 16.34 Intensive Use district, 16.70 Screening and Landscaping Regulations, 16.71 Water Efficient Landscape Standards, 16.75 Site Development Standards and 16.90 Site Development Plan Approval Procedure.

Vallejo Municipal Code Compliance

The project site is zoned Intensive Use (IU). The IU zoning district is intended to create and establish regulations for an intensive use district, in which a wide range of commercial services, manufacturing, and wholesale storage and distribution. "Construction Sales and Services" uses are permitted in the IU zoning district (VMC Section 16.34.020).

The project is consistent with the applicable standards in the IU zoning district. Key development standards are analyzed as follows:

Table 5 - Linear Commercial – Development Standards			
Code Section	**Development Standard**	**Proposal**	**Compliant**
16.34.060 (A): Max. Building Height	75 feet	59-feet, 4-inches	Yes
Screening and Landscaping as prescribed in Chapter 16.70			
16.70.060: Height Standards applicable to fencing and screening - B: Intensive Use Districts	- Required screening, except for plant materials, shall not be more than eight feet in height.	- Six-foot chain link fence and eight-foot masonry wall	Yes
16.70.070 (C): Required Landscaping - 1. Boundary Landscaping	Minimum of four feet along all property lines abutting streets; except for openings	Four feet	Yes
- 2. Vehicle Storage and Parking Areas	In addition to the landscaping required by subsection A, not less than two percent of any vehicle storage or parking area shall be landscaped.	No vehicle storage on the subject site.	No; staff has added a condition of approval to landscape parking areas.
- 3. Additional Landscaping	All portions of the building site, exclusive of structures, parking areas, recreational uses, driveways and walkways, shall be landscaped.	All areas of the site will be landscaped except for areas of existing buildings, parking areas, playground areas, driveways, and walkways	Yes
- 4. Trees	One street tree is required for each fifty feet of street frontage: 15 trees	4 Trees	No; staff has added a condition of approval to plant additional trees.

The intention of the IU development standards is to provide specific development criteria. The updates to the concrete batch facility is a permitted manufacturing accessory use to the construction sales and services primary use and is compliant with all development standards, as conditioned in this report.

New Proposed Conditions of Approval for Project.

In addition to requiring the applicant to comply with the conditions of approval listed in the prior Site Development Permit, after completing their analysis, staff is adding more conditions of approval to this entitlement, discussed below.

Landscaping and Screening.

VMC Section 16.70.020.D states landscaping screening is required between non- residential and residential zoning districts to assist with "*the assurance of safety and security, the enhancement of privacy, the control of dust, the abatement or attenuation of noise, and the improvement of the visual environment, including the provision of a neat appearance in keeping with neighborhood character".*

This site abuts residential zoning districts along the Tuolumne Street and Almond Avenue. Staff has added a condition of approval that before the issuance of a building permit, the applicant shall submit a revised landscape plan noting the removal all chain link fence and replace with an eight-foot masonry wall. It shall also show increased landscaping along all street facing frontages to better screen the property. All of the plants noted shall be in compliance with minimum size, type and material required in Section 16.70.090 and all applicable Water Efficiency Landscape Ordinance (WELO) requirements of Chapter 16.71 of the VMC. This plan will be subject to the review and satisfaction of the Planning and Development Services Director.

Figure 1: www.google.com/maps: April 2015

Figure 2: www.google.com/Maps; March 2019

Visual Impact

While manufacturing equipment is not typically held to the standards that new buildings are related to aesthetics and compatibility, the color of the concrete batch facility is quite striking and visible for several miles in every direction. Staff and the applicant have discussed the possibility of painting the equipment a natural earth tone color to lessen the visual impact. If painting proves unfeasible, there might be an opportunity add art work to the facility. The applicant is open to the idea and will look into the possibilities of painting the equipment or reaching out to local artist. A condition of approval has been added to require the applicant to do one of these options to the satisfaction of the Planning and Development Services Director prior to issuance of building permits. Staff also noted the presence of signs in excess of that allowed by code. A condition of approval has been added to require the applicant to remove submit an application for a sign permit that conforms to Code requirements prior to the issuance of a building permit.

Accessibility

Finally, in compliance with state accessibility regulations, a condition of approval will require new American Disabilities Act (ADA) improvements be installed such as a new ADA compliant access path from the public right-of-way to the office building, as well as a ADA compliant restroom and a new ADA compliant parking stall.

Solano County's Department of Resource Management Coordination

As part of the review and analysis of the project, staff contacted the Solano County's Department of Resource Management (SCDRM). This agency is charged with the review of the subject site's Hazardous Materials Business Plan (HMBP) through the California Environmental Reporting System (CERS) and they are required to complete triennial inspections for compliance. Per SCDRM, the business is not currently in compliance, as noted in their last inspection completed in 2018. Their HMPB through CERS update should also be submitted every year to ensure they are in compliance. In 2018, the SCDRM performed their routine inspection on the site and violations were discovered, (Attachment 3). To date, SCDRM has received no response by the applicant to these violations. Staff noted the violation status to the applicant and he stated he was unaware of the violations. A condition of approval has been included that these violations must be remedied prior to the issue of a building permit.

Standards for evaluating non-residential projects

VMC Section 16.75.030 requires the application to demonstrate, and the appropriate permit issuing authority shall certify that the use meets the following pertinent standards and criteria (the findings are in **bold**, and staff's determination follows in *italics)*:

A. **Compatibility with Adjacent Projects. All structures, outdoor storage areas and structures, parking areas and driveways shall be oriented to maintain privacy of and be compatible with less-intensive adjacent uses. Landscape, berming and fencing shall be required if necessary to preserve privacy.**

   The subject is located in an area that has a mixture of industrial, commercial and residential uses along Broadway Street, Tuolumne Street and Almond Avenue. Staff has added a condition of approval to remove and replace the six-foot chain link fence with an eight-foot masonry wall to maintain privacy from adjacent uses. A four-foot landscaping buffer with a total of 15 street trees, will be installed along all street facing frontages.

B. **Circulation and Access. The circulation pattern shall provide for pedestrian and vehicle connections with adjoining uses where such traffic is anticipated. Driveway intersections with arterial and major collector streets shall be kept to a minimum and shall be readily identifiable as access to the site. On large-scale projects, pedestrian traffic should be separated from vehicle traffic. Signalization and turning lanes may be required. Heavy truck traffic and loading areas should be kept separate from other traffic. Loading areas shall be screened from public view. Access easements may be required to provide future access to adjoining parcels.**

   The subject site will continue to have vehicular and pedestrian access from Broadway Street. Delivery trucks and cement mixture trucks will continue to use the existing truck route of heading north on Broadway Street, turning west on Lewis Brown Drive, and then north on Sonoma Boulevard (Highway 29) and head onto Highway 37. Loading areas will be screened form the public view with the new conditioned eight-foot masonry wall. Pedestrian access from Broadway Street will be provided on a new ADA compliant path way.

C. **Architectural Treatment. Overall architectural harmony is encouraged, with variation and interest provided through differing roof lines, canopies, building lines, setbacks, surface textures, colors and materials. Four-sided architectural treatment is appropriate on highly visible structures. The signing program should be an integral part of the building design in terms of size, placement, color and style. Open storage and solid waste storage areas should be screened in a manner compatible with the primary architectural treatment.**

   The architectural treatment above is typically used to assess new and existing buildings and may not be applicable to mechanical apparatus. However, in order to soften the visual impact of the equipment, Staff has included re-painting or addition of mural art of the equipment as a condition of approval. The existing open storage areas will be screened from the public right-of-way with the eight-foot masonry wall.

D. **Utilities. Mechanical equipment, meter boxes and utility transformers shall be screened from view. Light standards shall be in scale and compatible with the adopted architectural style.**

No additional lighting, mechanical equipment, meter boxes or utility transformers are proposed in this project.

Site Development Permit Findings

VMC Section 16.90.050(F) requires the Development Services Director to make the following findings prior to granting a Major Use Permit (the findings are in **bold**, and staff's determination follows in *italics*):

1. **That the proposed development meets the intent and specific standards and criteria prescribed in pertinent sections of this title.**

   The project involves a Site Development request for a property currently zoned Intensive Use (IU) District. The project is consistent with the IU District land use in that it involves the upgrading of a concrete batch facility, which is an accessory use to a landscaping business. The project is consistent with the applicable development standards outlined in Title 16 of the Vallejo Municipal Code, as proposed and conditioned.

2. **That the proposed development is consistent with the Vallejo general plan.**

   The project site is designated as Business/Light Industrial on the General Plan 2040 land use map. Permitted uses in this location include light industrial activities, including light manufacturing and warehousing. This project consists of the upgrading of a concrete batch facility, which is an accessory use to a landscaping business. The accessory structure and existing use is consistent to the general plan.

3. **That the proposed development shall serve to achieve groupings of structures which will be well related one to another and which, taken together, will result in a well-composed urban design, with consideration given to site, height, arrangement, texture, material, color and appurtenances, the relation of these factors to other structures in the immediate area, and the relation of the development to the total setting as seen from key points in the surrounding area; only elements of design which have some significant relationship to outside appearance shall be considered.**

   The above mentioned findings are typically used to evaluate new and existing buildings that are proposing improvements or a new development. These findings are not applicable for accessory equipment. However, a condition of approval will require that the mechanical apparatus be painted an earth tone to soften the highly visible equipment with the goal to have it blend in with the less intense uses in the immediate area. If that is not feasible art be added to make the equipment more complimentary to the surrounding area.

4. **That the proposed development shall be of a quality and character which harmonizes with, and serves to protect the value of, private and public investments in the area.**

   The project involves the upgrading of a concrete batch facility, which is an accessory use to a landscaping business. The applicant will be installing 2,618 square feet of new sidewalk, curb and parallel to Broadway Street and the west property line. New American Disabilities Act (ADA) improvements will be installed such as a new ADA access from the public right-of-way to the office building, an ADA restroom and a new ADA parking stall. Additionally, new landscaping and fencing will be installed along all streets surrounding the business. These site additions will serve to protect the value of private and public investments in the area.

5. **That the design of the development conforms in all significant respects with the proposals of any applicable district plan or development and control map which has been adopted by the city council.**

The project site is not located within the boundaries of any district plan or on a development plan and control map adopted by the City of Vallejo.

IV. ENVIRONMENTAL REVIEW

Following a review of the project, staff has determined that it is exempt from the requirements of the California Environmental Quality Act (CEQA). Under CEQA, the State has identified classes of projects which have been determined to not have a significant impact on the environment and are therefore exempt from the requirements of CEQA. The project is categorically exempt pursuant to Section 15303 Class 3: "New Construction or Conversion of small structures" and Section 15311 Class 11 "Accessory Structures" of the CEQA Guidelines.

Furthermore, the City has considered whether or not any of the exceptions found under Section 15300.2 of the CEQA Guidelines exist, which would preclude the project from being categorically exempt from CEQA. The project is consistent with Section 15300.2 as follows: (a) the site is not located in an environmentally sensitive area, (b) there are no cumulative impacts, (c) there are no significant effects due to unusual circumstances, (d) the project is not located near a scenic highway, (e) the project site is not located on an open a hazardous waste site pursuant to Government Code Section 65962.5, and (f) the project would not adversely affect any historical resource. The applicant has provided a letter of exemption from the Bay Area Air Quality Management BAAQMD. Due to the equipment producing less than 15 cubic yards per hour, the equipment is exempt from permits. Therefore, no further environmental review is required.

V. NOTICING AND PUBLIC COMMENTS

Pursuant to VMC Section 16.90.050 (C), notice of this hearing was sent to all active neighborhood groups within 500 feet of the subject property, property owners within 200 feet of the subject property, Planning Commission and to the applicant on April 2, 2021. Staff has not received any comments or questions from the public on the application as of writing this staff report.

VI. CONCLUSION / STAFF RECOMMENDATION

Based on the analysis contained in this staff report and the project's consistency with General Plan 2040 and the Vallejo Municipal Code, staff recommends that the Planning Commission **APPROVE** Site Development Permit (SD) #19-0004 based on the findings and provided in the attached Resolution and subject to the Conditions of Approval provided as Exhibit A to the Resolution.

VII. EXPIRATION

Pursuant to VMC Section 16.90.050(I), approval of this Site Development Permit shall expire automatically 18 months after its approval unless authorized construction has commenced prior to the expiration date (October 19, 2022, if approved at this meeting and not appealed).

VIII. APPEAL PROCEDURE

Pursuant to VMC Chapter 16.102, the applicant or any party adversely affected by the decision of the Planning Commission may, within ten days after the rendition of the decision of the Planning Commission appeal in writing to the City Council by filing a written appeal with a fee of $1,277 dollars with the City Clerk. Such written appeal shall state the reason or reasons for the appeal and why the applicant believes he or she is adversely affected by the decision of the Planning Commission. Such appeal shall not be timely filed unless it is actually received by the City Clerk or designee no later than the close of business on the tenth calendar day after the rendition of the decision of the Planning Commission. If such date falls on a weekend or City holiday, then the deadline shall be extended until the next regular business day.

Notice of the appeal, including the date and time of the City Council's consideration of the appeal, shall be sent by the City Clerk to all property owners within five hundred feet of the project boundary. The Council may affirm, reverse, or modify any decision of the Planning Commission that is appealed.

IX. ATTACHMENTS

1. Resolution No. PC 20-xx
    - Exhibit A – Conditions of Approval
2. Project Plans
3. Solano County's Department of Resource Management Routine inspection
4. BAAQMD Exemption Letter
5. Sound Levels from Applicant
6. Solano County's Department of Resource Management Complaint Log
7. Site Development (SD) 2003 – 0002 Resolution and Conditions of Approval
8. Noticing Map

CITY OF VALLEJO PLANNING COMMISION

RESOLUTION NO. PC 21-xx

A RESOLUTION APPROVING A SITE DEVELOPMENT PERMIT (SD) #19-0004 FOR THE UPGRADING OF A CONCRETE BATCH FACILITY, WHICH IS AN ACCESSORY USE TO A LANDSCAPING BUSINESS AT 1888 BROADWAY

* *

I. GENERAL FINDINGS

WHEREAS, on August 29, 2017, the City Council adopted General Plan 2040; and

WHEREAS, the property has a General Plan 2040 land use designation of Business/Light Industrial and is zoned Intensive Use District; and

WHEREAS, on February 7, 2019, Bunty Sidhu submitted an application seeking a Site Development to upgrade a concrete batch facility, which is an accessory use to a Landscaping business. ("Project") located at 1888 Broadway; and

WHEREAS, on January 28, 2021, the application was deemed complete for processing; and

WHEREAS, on April 19, 2021, the City of Vallejo Planning Commission, after giving all public notices required by State law and the City of Vallejo Municipal Code, conducted a duly noticed public hearing; and

WHEREAS, the Planning Commission considered testimony and evidence, both written and oral, provided at the public hearing, as well as other documents contained in the record of proceedings relating to the Project, which are maintained in the offices of the City of Vallejo Planning Division; and

WHEREAS, based on evidence received in the staff report and at the public hearing, the Planning Commission makes the following factual findings:

II. CALIFORNIA ENVIRONMENTAL QUALITY ACT FINDING

Following a review of the project, staff has determined that it is exempt from the requirements of the California Environmental Quality Act (CEQA). Under CEQA, the State has identified classes of projects which have been determined to not have a significant impact on the environment and are therefore exempt from the requirements of CEQA.

The project is categorically exempt pursuant to Section 15303 Class 3: "New Construction or conversion of small structures" and Section 15311 Class 11: "Accessory Structures" of the CEQA Guidelines. Furthermore, the City has considered whether or not any of the exceptions found under Section 15300.2 of the CEQA Guidelines exist, which would preclude the project from being categorically exempt from CEQA. The project is consistent with Section 15300.2 as follows: (a) the site is not located in an environmentally sensitive area, (b) there are no cumulative impacts, (c) there are no significant effects due to unusual circumstances, (d) the project is not located near a scenic highway, (e) the

project site is not located on an open a hazardous waste site pursuant to Government Code Section 65962.5, and (f) the project would not adversely affect any historical resource. The applicant has provided a letter of exemption from the Bay Area Air Quality Management BAAQMD. Due to the equipment producing less than 15 cubic yards per hour, the equipment is exempt from permits. Therefore, no further environmental review is required.

III. FINDINGS RELEVANT TO THE APPROVAL OF THE SITE DEVELOPMENT PERMIT (VMC Section 16.90.050)

1. **That the proposed development meets the intent and specific standards and criteria prescribed in pertinent sections of this title;**

   The project involves a Site Development request for a property currently zoned Intensive Use (IU) District. The project is consistent with the IU District land use in that it involves the upgrading of a concrete batch facility, which is an accessory use to a landscaping business. The project is consistent with the applicable development standards outlined in Title 16 of the Vallejo Municipal Code, as proposed and conditioned.

2. **That the proposed development is consistent with the Vallejo general plan;**

   The project site is designated as Business/Light Industrial on the General Plan 2040 land use map. Permitted uses in this location include light industrial activities, including light manufacturing and warehousing. This project consists of the upgrading of a concrete batch facility, which is an accessory use to a landscaping business. The accessory structure and existing use is consistent to the general plan.

3. **That the proposed development shall serve to achieve groupings of structures which will be well related one to another and which, taken together, will result in a well-composed urban design, with consideration given to site, height, arrangement, texture, material, color and appurtenances, the relation of these factors to other structures in the immediate area, and the relation of the development to the total setting as seen from key points in the surrounding area; only elements of design which have some significant relationship to outside appearance shall be considered;**

   The above mentioned findings are typically used to evaluate new and existing buildings that are proposing improvements or a new development. These findings are not applicable for accessory equipment. However, a condition of approval will require that the mechanical apparatus be painted an earth tone to soften the highly visible equipment with the goal to have it blend in with the less intense uses in the immediate area. If that is not feasible art be added to make the equipment more complimentary to the surrounding area.

4. **That the proposed development shall be of a quality and character which harmonizes with, and serves to protect the value of, private and public investments in the area;**

   The project involves the upgrading of a concrete batch facility, which is an accessory use to a landscaping business. The applicant will be installing 2,618 square feet of new sidewalk, curb and parallel to Broadway Street and the west property line. New American Disabilities Act (ADA) improvements will be installed such as a new ADA access from the public right-of-way to the office building, an ADA restroom and a new ADA parking stall. Additionally, new landscaping and fencing will be installed along all

streets surrounding the business. These site additions will serve to protect the value of private and public investments in the area.

5. **That the design of the development conforms in all significant respects with the proposals of any applicable district plan or development and control map which has been adopted by the city council;**

   The project site is not located within the boundaries of any district plan or on a development plan and control map adopted by the City of Vallejo.

V. RESOLUTION APPROVING THE PROJECT AT 1888 Broadway

NOW, THEREFORE, LET IT BE RESOLVED that the Planning Commission hereby **APPROVES** Site Development Permit (SD) #19-0004 to legalize the installation of a concrete batch facility that has installed equipment without benefit of permits based on the above findings and subject to the Conditions of Approval attached to this Resolution.

VI. VOTE

PASSED AND ADOPTED at a regular meeting of the Planning Commission of the City of Vallejo, State of California, on the 19th day of April, 2021 by the following vote to-wit:

AYES:
NOES:
ABSENT:
ABSTAIN:

_____
DIOSDADO MATULAC, CHAIRPERSON
City of Vallejo Planning Commission

Attest:

_____
Christina Ratcliffe, SECRETARY
City of Vallejo Planning Commission

CONDITIONS OF APPROVAL

Site Development #19-0004
1888 Broadway, Vallejo, CA 94589
APN # 0052-090-170, -210, -220, -230

PERMIT DESCRIPTION: Site Development approval for the upgrading of a concrete batch facility, which is an accessory use to a landscaping business. The maximum height of the equipment is 59-feet, 4-inches.

A. **PLANNING DIVISION**
Cesar Orozco | cesar.orozco@cityofvallejo.net | (707) 648-5436

Special Conditions

1. Prior to building permit final inspection, the business owner shall comply with all of the following conditions of approval for Site Development (SD20-0003) (see Attachment 1 of this Exhibit).

2. Before the issuance of a building permit the applicant shall submit a revised landscape plan noting:

    a. The removal all chain link fence and installation of an eight-foot masonry wall.

    b. Show increased landscaping along all parking areas and street facing frontages to better screen the property. All of the plants noted shall be in compliance with minimum size, type and material required in Section 16.70.090 and all applicable Water Efficiency Landscape Ordinance (WELO) requirements of Chapter 16.71 of the VMC.

    c. Street trees to be installed and maintained at a ratio of one per 50 feet of street frontage along Broadway, Tuolumne Street and Almond Avenue for the project site.

    This plan will be subject to the review and satisfaction of the Planning and Development Services Director and subject to the specifications listed in Pre-Building Permit #4, below.

3. Prior to building inspection final, the landscape plan noted in condition #2 shall be completely installed to the satisfaction of the Planning and Development Services Director.

4. No trees shall be removed without written authorization from the City of Vallejo Planning Division. Any trees removed from the subject property shall be replaced to the satisfaction of the Planning and Development Services Director.

5. Prior to the issuance of building permit, applicant shall submit for a sign permit for all signage and remove all non-permitted signs.

6. Hours of operation of the business are Monday to Saturday, 8 a.m. to 5 p.m. Any changes to the hours of operation require Planning Commission approval.

7. Equipment output shall not exceed 16 cubic yards a day and the rate of 12 cubic yards an hour. Any increase to equipment output requires Planning Commission approval.

8. Prior to issuance of building permit, the applicant shall submit paint options or local artist proposals for the equipment to the Planning and Development Services Director. The Director shall discuss these options with the applicant and approve a final plan for implementation. The applicant shall fulfill the final plan to the satisfaction of the Planning and Development Services Director.

9. Prior to building inspection final, all violations stipulated by the Solano County's Department of Resource Management shall be resolved to the satisfaction of the Planning and Development Services Director.

10. The premises shall be graffiti free. See Condition 38 for additional property maintenance requirements.

Pre-Building Permit

1. Prior to building permit issuance, submit for a lot line adjustment to merge four parcels.

2. Prior to building permit issuance, submit a numbered list to the Planning Division with a written response on how each condition of project approval contained in this report will be satisfied. The list should be submitted to the project planner who will coordinate development of the project. The approved COA will be included in the permit set after the cover sheet with each condition listed and how the applicant will address each condition in writing.

3. Prior to building permit issuance, the **Planning Division** shall confirm that the building permit drawings and subsequent construction substantially conform with the approved Planning application drawings.

4. Prior to building permit issuance, submit construction-level landscaping plans prepared by a registered landscape architect to the Planning Division for review and approval. Landscape plans shall comply with Chapter 16.70 (VMC) and with the approved landscape plans, and are to include the following:

    a. Location, species and size of all mature trees six inches in trunk diameter or greater;
    b. Replacement of any mature trees to be removed;
    c. City-approved street trees to be planted at least 6 feet from any sewer line;
    d. Specification of low-growth-type species adjacent to doors, windows, and walkways;
    e. Low-water-using and drought-resistant plant materials;
    f. Screening of the required backflow preventers;
    g. All trees to be a minimum of 15-gallon, double staked; at least 50 percent of the proposed shrubs shall be a minimum of 5-gallon;
    h. Irrigation plan indicating all components of the irrigation system including sprinklers and other outlets, valves, backflow prevention devices, controllers, piping and water usage; and
    i. Six-inch-high curbing around planters.

Pre-Operation

1. Prior to operation/final building inspection, the project landscape architect shall provide a complete Certificate of Completion and Certificate of Installation According to the Landscape Documentation in accordance with VMC Chapter 16.71: Water Efficient Landscape Requirements. The documentation shall include the following:
    a. Irrigation Scheduling (VMC Section 16.71.050)
    b. Schedule of Landscape and Irrigation Maintenance (VMC Section 16.71.051)
    c. Landscape Irrigation Audit Report (VMC Section 16.71.052)
    d. Soil Management Report (VMC Section 16.71.045)

2. Prior to occupancy/final building inspection, install landscaping and irrigation per approved plans. The landscape architect shall verify in writing that the landscaping and irrigation have been installed in accordance with the approved landscape plans with respect to size, health, number and species of plants, and the overall design concept.

3. Prior to operation/final building inspection, a new American Disabilities Act (ADA) improvements be installed such as a new ADA compliant access path from the public right-of-way to the office building, as well as a ADA compliant restroom and a new ADA compliant parking stall.

4. Prior to occupancy/final building inspection, the Lot Line Adjustment permit shall be completed.

General Requirements

1. The Planning & Development Services Director is hereby authorized to modify these conditions for minor adjustments to respond to unforeseen field constraints provided that the goals of these conditions can be safely achieved in some other manner. The applicant must submit a written request to the Planning Division demonstrating that the condition(s) is infeasible due to specific constraints (e.g. lack of property rights) and shall include a proposed alternative measure or option to meet the goal or purpose of the condition. The Planning Division shall consult with affected City departments and agencies and may require an application for modification of the approved permit. Changes to conditions that may be authorized by the Planning and Development Services Director are limited to those items that are not adopted standards or were not adopted as mitigation measures or that were not at issue during the public review process. Any modification of the permit conditions shall be documented with an approval letter from the Planning Division, and shall not affect the original permit approval date or the term for expiration of the permit.

2. Within five working days after project approval, the applicant/operator shall pay the Notice of Exemption filing fee (the latest fees in effect at the time of payment) for County Clerk processing, made payable to Solano County and submitted to the City of Vallejo Planning Division. If an in-person filing is required, such filing shall be completed by the applicant, unless directed otherwise by the Planning Division. NOTE: If the fees are not paid and the Notice of Exemption is not filed within five working days after approval of the project, it will extend time frames for California Environmental Quality Act (CEQA) legal challenges.

3. Pennants, banners, streamers, or flags in connection with special promotions and business openings shall be permitted for a period not to exceed 30 days. The same, different, or similar pennants, banners, streamers, and flags shall not be permitted within 150 calendar days after such removal. No pennants, banners, streamers, balloons, inflatable devices, flags, or any other advertising devices shall be mounted on or above any roof or mansard, or otherwise extend above a parapet wall or ridge of a structure. (VMC section 16.64.030)

4. Required landscaping shall be maintained in a neat, clean, and healthy condition. This shall include pruning, mowing of lawns, weeding, removal of litter, fertilizing, replacement of plants when necessary, and the regular watering of all plantings.

5. Obtain an inspection from the Planning Division prior to occupancy/final building inspection. All inspections require a minimum 24-hour notice. Occupancy permits shall not be granted until all construction and landscaping is completed and finaled in accordance with the approved plans and required conditions of approval or a bond has been posted to cover all costs of the unfinished work as agreed to by the Planning and Development Services Director.

6. Construction-related activities shall be limited to between the hours of 7 a.m. and 6 p.m., Monday through Saturday. No construction is to occur on Sunday or federal holidays. Construction equipment noise levels shall not exceed the City's maximum allowable noise levels.

7. Applicant shall indemnify, hold harmless, and defend City, its officers, officials, directors, employees, agents, volunteers and affiliates and each of them from any and all claims, demands, causes of action, damages, costs, expenses, actual attorney's fees, applicant's fees, expert fees, losses or liability, in law or in equity, of every kind and nature whatsoever arising out of or in connection with Applicant's operations, or any subcontractor's operations, to be performed under this agreement for Applicant's or subcontractor's tort negligence including active or passive, or strict negligence, including but not limited to personal injury including, but not limited to bodily injury, emotional injury, sickness or disease, or death to persons and/or damage to property of anyone, including loss of use thereof, caused or alleged to be caused by any act or omission of Applicant,

or any subcontractor, or anyone directly or indirectly employed by any of them or anyone for the full period of time allowed by the law, regardless to any limitation by insurance, with the exception of the sole negligence or willful misconduct of the City. No modification of the project, any application, permit, certification, condition, environmental determination, other approval, change in applicable laws and regulations, or change in processing methods shall alter the Applicant's indemnity obligation.

8. Lighting. The following lighting requirements shall apply:

    a. Exterior perimeter lighting shall be in place prior to operation.
    b. Exterior lighting shall be code compliant LED fixtures or high efficiency luminaries, and shall have an illumination intensity of between one and four foot candles.
    c. Lights shall be directed and shielded so as not to illuminate adjoining properties.
    d. Lights shall include housing to protect against breakage.
    e. Broken or burnt out lights shall be replaced within 48 hours.
    f. Transitional lighting shall be incorporated in exterior areas providing access to and from buildings or uses within the site.
    g. Trees and shrubs shall not interfere with the distribution of lighting as required by this Use Permit.

9. Noise. The following noise requirements shall apply:

    a. The use of generators is prohibited, except as short-term temporary emergency back-up systems.
    b. Other Noise Performance Standards as prescribed in Title 16 of the VMC.

10. Property Maintenance. The following property maintenance requirements shall apply:

    a. Property shall be maintained free of debris, litter and trash.

11. Exterior Modification. All exterior modifications to the building façade or site, including landscaping, parking lot improvements, fencing, lighting, and signage, shall be subject to City of Vallejo review and approval. Razor or barbed wire and similar fencing is not permitted.

12. Any proposed modification, alteration, and/or expansion of the use authorized by this Site Development Permit shall require the prior review and approval of the City of Vallejo Planning and Development Services Director, unless otherwise specified. Such changes may require a new or modified Site Development and additional environmental review, if warranted.

Approval Time/Revocation

13. Approval of this Site Development shall automatically expire 18 months from the date of approval, unless building permits are issued and authorized construction has commenced prior to the expiration date. The effective date of the permits and approvals are April 28, 2021 (if approved at the hearing).

14. A request for a time extension from the expiration date of October 19, 2022 (if approved during the hearing) can be considered if an application with required fee is filed at least 45 days before the original expiration date, otherwise a new application is required. A public hearing will be required for all extension applications, except those involving only Design Review. Extensions are not automatically approved. Changes in conditions, City policies, surrounding neighborhood, and other factors permitted to be considered under the law, may require, or permit denial.

15. If the Planning Division, either independently or as a result of complaints from the public, becomes aware that the use is being conducted in a manner which violates the conditions of this Permit or other applicable City regulations, and Planning Division staff is unable to obtain compliance or

abatement, staff will refer the Site Development to Code Enforcement and/or the Planning Commission for possible suspension or revocation.

B. BUILDING DIVISION

Steve Arnold | steve.arnold@cityofvallejo.net | (707) 648-4387

1. Permits required per California Code of Regulations, Title 24 and applicable City Ordinance in effect at the time of completed Building Permit application date and required fees paid at time of application.

2. 2019 California Code of Regulations apply if permit application(s) received before end of 2022.

3. Permit application will require an Electrical Plan, structural plan for batch plant assembly, an Accessibility Plan for parking and service counter as well as Special Inspection Agreement and Waste Management Plan

C. PUBLIC WORKS

Philip Ho | Philip.ho@cityofvallejo.net | (707) 554-5902

PUBLIC WORKS – SPECIFIC CONDITIONS OF APPROVAL

1. Proposed is a regulated project and is subject to C.3 requirements. Submit a Stormwater Control Plan (SWCP) per Stormwater C.3 Guidebook, 2017 edition, Chapter 2, including features and facilities to ensure runoff is treated before leaving the site. Use the LID Design Guide in Chapter 3, including sizing factors and criteria for "treatment only." This item is subject to further review and approval by C.3 consultant and the City Engineer.

2. Submit Civil Plans including Grading Plan, Drainage Plan, Erosion Control Plan, Improvement Plan, Utility Plan prepared by a licensed Civil Engineer. Plans to show all existing and proposed utilities. Plans to shows limits of work which includes on-site improvements and street frontage improvements such as sidewalk, curb, gutter, driveway. It also includes improvements within City right-of-way.

3. The driveway approach fronting the properties shall comply with ADA requirements to current city standards. (See Standard Condition PW22 below)

4. Install frontage improvements on Broadway including driveway, sidewalk, curb, gutter to City standards.

5. Install impervious surface in the travel lane 50 feet from the back of the driveway approach and the entire width of the driveway (min 30 feet).

6. Comply with ADA accessibility requirements. The project plan shall include ADA requirement for review. (VMC Chapter 16.75.030; PW22)

7. Enter into a Deferred Improvement Agreement with the City to participate in the cost of undergrounding overhead utility wires fronting the property on Broadway. The agreement shall include the installation of streetlights along the property street frontage.

8. Submit Engineer's cost estimate for the proposed site development consistent with the City's unit price for all construction items.

9. Make fee deposit for plan review and inspection to Public Works.

10. Obtain an Encroachment Permit for private installation on Broadway in City right-of-way. Project is required to maintain landscaping and irrigation along the project street frontage. This requires a Maintenance Agreement.

11. The sprinkling system along Broadway shall not sprinkle on city sidewalk or change the irrigation to drip system.

12. **STORMWATER & C.3**. Developer shall provide the following and obtain approval prior to issuance of grading permit:

    Submit a Stormwater Control Plan (SWCP) prepared in accordance with the current C.3 Guidebook for review and approval by Engineering Services prior to issuance of any permit. The C.3 Guidebook shall mean the most recent version of the Contra Costa Clean Water Program (CCCWP) Stormwater C.3 Guidebook including any addenda and the most recent version of the City of Vallejo Addendum to the CCCWP Stormwater C.3 Guidebook. The SWCP shall be prepared and certified by a Civil Engineer, registered in the State of California, demonstrating an understanding of the design of treatment measures for water quality and groundwater protection principles applicable to the project site. Include features and facilities to ensure runoff is treated before leaving the site. Use the LID Design Guide including sizing factors and criteria for treatment only ***(ENGR)***.

    a. Prior to issuance of permits for building, site improvements, or landscaping, applicant shall submit a permit application consistent with the applicant's approved Stormwater Control Plan (SWCP), and include drawings and specifications necessary for construction of site design features, measures to limit directly connected impervious area, pervious pavements, self-retaining areas, treatment BMP's, permanent source control BMP's, and other features that control stormwater flow and potential stormwater pollutants. The permit application shall include a completed "Stormwater Control Plan Checklist" as described in the C.3 Guidebook, and a detailed draft Stormwater BMP Operation and Maintenance Plan consistent with the general O&M plan included in the applicant's approved Stormwater Control Plan. Guidelines for the preparation of Stormwater BMP Operation and Maintenance Plans are in Chapter 6 of the C.3 Guidebook. ***(ENGR)***

    b. Construct stormwater treatment measures per the approved SWCP prior to occupancy approval. ***(ENGR)***

    c. (Submit d & e below if disturbed impervious surfaces are >10,000 SF)

    d. Submit a final Stormwater BMP Operation and Maintenance Plan (O&M Plan) in accordance with City of Vallejo Guidelines, for review and approval by Engineering Services, prior to occupancy approval. This O&M Plan shall incorporate City comments on the draft O&M Plan and any revisions resulting from changes made during construction. The implementation of the O&M Plan shall be the responsibility of each property owner concurrently and individually or through a recorded joint maintenance agreement where one exists or through a Business Owners Association (BOA). ***(ENGR)***

    e. Execute and record any agreements identified in the SWCP which pertain to the transfer of ownership, right-of-entry for inspection or abatement, and/or long-term maintenance of stormwater treatment or hydrograph modification BMPs, prior to occupancy approval. ***(ENGR)***

PUBLIC WORKS – STANDARD CONDITIONS OF APPROVAL

The following code requirement conditions may apply prior to detailed construction plans submitted to the city for review:

PW1. **HOW PROJECT CONDITIONS SATISFIED.** Prior to building permit issuance, submit a numbered list to the **Planning Division** stating how each condition of project approval contained in this report will be satisfied. The list should be submitted to the project planner who will coordinate development of the project.

PW2. **PUBLIC IMPROVEMENT STANDARDS.** All public improvements shall be designed to City of Vallejo standards and to accepted engineering design standards. The **City Engineer** has all such standards on file and the Engineer's decision shall be final regarding the specific standards that shall apply. (COV, Regulations & Standard Specifications, 2011).

PW3. **IMPROVEMENT PLANS.** Prior to building permit submittals, submit three sets of plans to the **Department of Public Works** for plan check review and approval. (Improvement or civil plans are to be prepared by a licensed civil engineer.) Plans are to include, but may not be limited to, grading and erosion control plans, improvement plans, joint trench utility, street light plans, and landscaping, irrigation and fencing plans and all supporting documentation, calculations and pertinent reports. (COV, Regulations & Standard Specifications, 2011, Section 1.1.7–A).

PW4. **GRADING**. Not Applicable.

PW5. **LINE OF SIGHT CRITERION.** In design of grading and landscaping, line of sight distance shall be provided based on Caltrans standards. Installation of fencing, signage, above ground utility boxes, etc. shall not block the line of sight of traffic and must be set back as necessary. (VMC Chapter 10.14).

PW6. **ON-SITE SOILS ENGINEER.** During grading operations, the project geologist or soils engineer and necessary soils testing equipment must be present on site. In the absence of the soils engineer or his representative on site, the **Department of Public Works** shall shut down the grading operation. (VMC Chapter 12.40.080).

PW7. **DUST AND EROSION CONTROL.** All dust and erosion control shall be in conformance with City standards and ordinances. (VMC Chapters 12.40.050 & 12.40.070).

PW8. **COMPACTION TESTS.** Prior to building permit issuance or acceptance of grading, compaction test results and certification letter from the project soils engineer and civil engineer confirming that the grading is in conformance with the approved plans must be submitted to the **Department of Public Works** for review and approval. Test values must meet minimum relative compaction recommended by the soils engineer (usually at least 90 percent). (COV, Regulations & Standard Specifications, 2011, Section 2.4.1).

PW9. **DRIVEWAY STANDARDS.** Entrances to any private project must be standard driveway approaches unless deviation is permitted by the **City Engineer**. (VMC, Chapter 10.04.260).

PW10. **STREET EXCAVATION PERMIT.** Obtain a street excavation permit from the **Department of Public Works** prior to performing any work within City streets or rights-of-way, or prior to any cutting and restoration work in existing public streets for utility trenches. All work shall conform to City standards. (VMC Chapter 10.08).

PW11. **ENCROACHMENT PERMIT.** Prior to building permit issuance, obtain an encroachment permit from the **Department of Public Works** for all work proposed within the public right-of-way. (VMC Chapter 10.16).

PW12. **TRAFFIC CONTROL PLAN.** Prior to start of construction; submit a traffic control plan to the **Department of Public Works** for review and approval. (CA MUTCD).

PW13. **COORDINATION OF CONSTRUCTION INSPECTION.** Construction inspection shall be coordinated with the **Department of Public Works** and no construction shall deviate from the approved plans. (COV, Regulation & Standard Specification Sections 1.1.4 & 1.1.5).

PW14. **PLAN CHANGES.** The project design engineer shall be responsible for the project plans. If plan deviations are necessary, the project engineer must first prepare a revised plan or details of the proposed change for review by the **Department of Public Works** and, when applicable, by **Vallejo Flood and Wastewater District**. Changes shall be made in the field only after approval by the City. At the completion of the project, the design engineer must prepare and sign the "as built" plans. (COV, Regulation & Standard Specification Section 1.1.9).

PW15. **BONDS AND FEES.** Prior to approval of construction plans, provide bonds and pay applicable fees. Bonding shall be provided to the City in the form of a "Performance Surety" and a separate "Labor and Materials Surety" in amounts stipulated by City ordinance. (VMC, Section 15.12.090)

PW16. **INSTALL IMPROVEMENTS.** Prior to occupancy/final building inspection, install the improvements required by the **Department of Public Works** including but not limited to streets and utilities.

PW17. **SIDEWALK REPAIR.** Prior to occupancy/final building inspection, remove and replace any broken curb, gutter, sidewalk or driveway approach as directed in the field by the **City Engineer**. (VMC, Section 10.04).

PW18. **FLOOD PROTECTION.** Not Applicable.

PW19. **STREET TREES.** Prior to release for occupancy, plant required street trees in accordance with City Municipal Code. The list of approved trees is available in the office of the Public Works Director. The minimum standard shall be at least one tree for each 50 feet of street frontage or fraction thereof, including secondary or side streets. Street tree(s) shall be inspected by Public Works Landscape Inspector prior to release for occupancy. (VMC Chapter 15.06.190 and Regulations and Standard Specifications Section 3.3.48).

PW20. **JOINT TRENCH**. The developer shall provide joint trench plans for the underground electrical, gas, telephone, cable television and communications conduits and cables including the size, location and details of all trenches, location of all building utility service stubs and meters and placement or arrangements of junction structures as a part of the Improvement Plans submitted for the project. The composite drawings and/or utility improvement plans shall be signed by a licensed civil engineer. (VMC Chapters 15.06.160 & 15.06.170).

PW21. **SIGNAL INTERCONNECT CABLES**. There may be fiber optic and /or copper signal inter connect cables located at the edge of the roadway or under the sidewalk. The plans should address either the relocation of these cables or a note should be made of the cable location. A warning should be included on the plans stating that if the cable damaged, the entire length of the cable between the two nearest hubs will be will be replaced by the contractor unless otherwise authorized by the City Engineer.

PW22. **ADA COMPLIANCE WITHIN CITY ROW.** In order to ensure ADA compliance within any and all City ROW, ADA compliance will be addressed in accordance to the state government and federal codes:

HEALTH AND SAFETY CODE DIVISION 13 PART 5.5. ACCESS TO PUBLIC ACCOMMODATIONS BY PHYSICALLY HANDICAPPED PERSONS [**19955** - 19959.5] (Part 5.5 added by Stats. 1969, Ch. 1560.)
https://leginfo.legislature.ca.gov/faces/codes_displayText.xhtml?lawCode=HSC&division=13.&title=&part=5.5.&chapter=&article=

GOVERNMENT CODE DIVISION 5 CHAPTER 7 ACCESS TO PUBLIC BUILDINGS BY PHYSICALLY HANDICAPPED PERSONS [4450 – 4461] (Chapter 7 added by Stats. 1968, Ch. 261.)
https://leginfo.legislature.ca.gov/faces/codes_displayText.xhtml?lawCode=GOV&division=5.&title=1.&part=&chapter=7.&article=

FEDERAL THE AMERICAN WITH DISABILITIES ACT OF 1990
https://www.ada.gov/2010_regs.htm

D. VALLEJO FLOOD AND WASTEWATER DISTRICT
Gustavo Silva | gussilva@vallejowastewater.org | (707) 644-8949

1. The applicant shall pay the applicable plan review fees prior to issuance of building permits.

E. ATTACHMENTS

1. Site Development (SD) 2003 – 0002 Conditions of Approval

B. The proposed concrete blender in an existing retail landscape materials use as conditioned meets the intent and specific standards prescribed in the Zoning Ordinance as per Section 7 of this report.

C. The proposed concrete blender in an existing retail landscape materials use as conditioned is compatible with the existing use with the addition of upgraded front landscaping. The project will result in a well composed urban design, with consideration given to site, height, arrangement, texture, material, color and appurtenances, the relation of these factors to other structures in the immediate area, and the relation of the development to the total setting as seen from key points in the surrounding area.

D. The proposed addition of a concrete blender in an existing retail landscape use, as conditioned is of a quality and character that harmonizes with and serves to protect the value of private and public investments in the neighborhood.

CONDITIONS REQUIRED PRIOR TO ISSUANCE OF BUILDING PERMIT:

Planning Division:

1. The applicant shall remove any dead vegetation along Broadway Street and install the approved landscape plan as presented and attached here and shall properly maintain the new landscaping and the existing landscaping around the site.

2. The applicant shall remove all illegally installed signs on the front of the site and shall secure a sign permit for any additional signage.

3. Prior to building permit issuance, the Planning Division shall confirm that the building permit drawings and subsequent construction substantially conform to the approved Planning application drawings.

Public Works Department:

1. All public improvements shall be designed to City of Vallejo standards and to accepted engineering design standards. The City Engineer has all such standards on file and the Engineer's decision shall be final regarding the specific standards that shall apply.

2. Prior to building permit issuance; submit three sets of plans to the Department of Public Works for plan check review and approval. (Improvement or civil plans are to be prepared by a licensed civil engineer.) Plans are to include, but may not be limited to, grading and erosion control plans, frontage improvement plans including landscaping and irrigation, joint trench utility, street light plans, fencing plans and all supporting documentation, calculations, and pertinent reports.

3. All dust and erosion control shall plans shall be prepared and carried out in conformance with City standards, ordinance, and NPDES requirements.

4. Obtain a street excavation permit and encroachment permit from the Department of public works prior to performing any work within City streets or rights-of-way, or prior to any cutting and restoration work for utility trenches in existing public streets. All work shall conform to City standards.

5. The applicant/property owner shall sign an agreement to underground overhead utility lines or to participate in the cost of future under grounding overhead utility lines fronting the property on Broadway.

6. Prior to building/mechanical permit issuance, the applicant shall submit a numbered list to the Planning Division stating how each condition of project approval contained in this report shall be satisfied. The list should be submitted to the project planner who will coordinate development of the project.

7. In design of grading and landscaping, line-of-site distance shall be provided based on Caltrans standards. Installation of fencing, signage, above ground utility boxes, etc., shall not block the line-of-site of traffic and must be set back as necessary.

8. Construction inspection shall be coordinated with the Department of Public Work for review and approval.

CONDITIONS REQUIRED PRIOR TO OCCUPANCY/FINAL INSPECTION:

Planning Division:

1. Obtain an inspection from the Planning Division prior to final building inspection. All inspections require a minimum 24-hour notice. Occupancy permits shall not be granted until all construction and landscaping is completed and finaled in accordance with the approved plans and required conditions of approval or a bond has been posted to cover all costs of the unfinished work as agreed to by the Planning Manager.

2. No raw compost shall be stored on site. Any topsoil stored and sold at the site shall be blended off-site and properly stored and covered on-site to eliminate run-off during the rainy season and dust due to wind.

3. Prior to final inspection and operation of the cement blender, sound containment insulation consisting of plywood and Styrofoam or R-11 insulation shall be installed around the blender motor.

4. Required landscaping shall be maintained in a neat, clean and healthy condition. This shall include pruning, weeding, removal of litter, fertilizing replacement of plants when necessary and the regular watering of all plants

Public Works Department:

1. Prior to final building inspection, install the improvements required by the Department of public works including but not limited to streets and utilities.

2. Prior to occupancy/final building inspection, remove and replace any broken curb, gutter, sidewalk, or driveway approach as directed in the field by the City Engineer.

3. The site driveways shall be improved to avoid mud and dirt tracking from the site to Broadway Street

4. Prior to final inspection, plant street trees in accordance with the Vallejo Municipal Code and consistent with the approved plans. Street trees shall be inspected by the Public Works Landscape Inspector prior to release of final inspection

Fire Prevention:

These conditions shall apply unless otherwise approved by the Fire Marshall:

1. Prior to final building inspection, install 3A-40BC portable fire extinguishers as required by the Fire Prevention Division. One extinguisher is required per 75 feet of travel distance. (1998 CFC Standard 10-1; NFPA 10).

2. Prior to occupancy/final building inspection, submit all plans and applicable fees to the Fire Prevention Division for approval.

3. An automatic fire sprinkler system is required for the facility. (1998 CFC Section 1003.1.2 added VMC Section 12.28.190).

General Conditions:

1. The conditions herein contained shall run with the property and shall be binding on the applicant and all heirs, executors, administrators, and successors in interest to the real property that is the subject of this approval.

2. The applicant shall defend, indemnify, and hold harmless the City of Vallejo or its agents, officers, and employees from any claim, action, or proceeding against the City or its agents, officers, or employees to attack, set aside, void, or annul this approval by the City. The City may elect, at its discretion, to participate in the defense of any action.

3. If the Planning Division, either independently or as a result of complaints from the public, becomes aware that the use is being conducted in a manner which violates the conditions of this use permit or other applicable City regulations, and Planning Staff is unable to obtain compliance or abatement, staff will refer the permit to the Planning Commission for possible suspension or revocation.

Expiration:

1. The site development permit shall expire in 18 months unless building permits are secured and construction has begun, or unless the City prior to the expiration date extends this permit.

Attachment 2

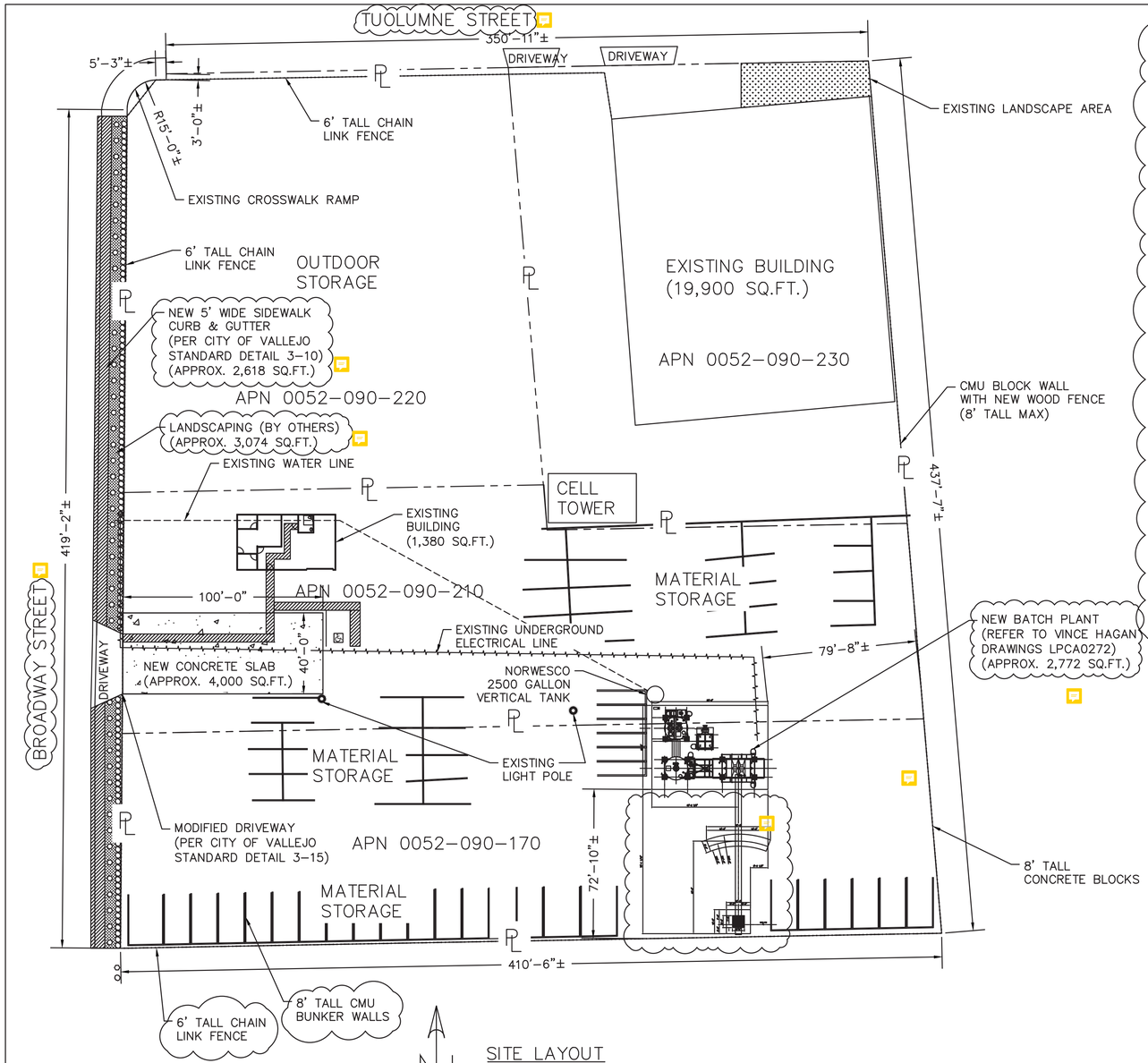

SITE LAYOUT
(SCALE 1" = 32'-0")

PROJECT DESCRIPTION
THE PURPOSE OF THIS PROJECT IS TO REPLACE THE EXISTING CONCRETE BATCH PLANT WITH A NEW CONCRETE BATCH PLANT THAT MEETS CURRENT INDUSTRY STANDARDS. THE NEW CONCRETE BATCH PLANT WILL MEET CURRENT BUILDING CODES AND IMPROVE AIR QUALITY WITH A NEW DUST COLLECTION SYSTEM. NO CHANGES IN PRODUCTION SHALL OCCUR DUE TO THE REPLACEMENT OF THE CONCRETE BATCH PLANT.

	EXISTING OPERATIONS	PROPOSED OPERATIONS
OUTPUT	16 CYDS/DAY	16 CYDS/DAY
RATE OF OUTPUT	12 CYDS/HR	12 CYDS/HR
HOURS OF OPERATION	8AM TO 5 PM	8AM TO 5 PM
NUMBER OF EMPLOYEES	2 TO RUN CONCRETE BATCH PLANT	2 TO RUN CONCRETE BATCH PLANT
	11 EMPLOYEES TOTAL (INCLUDING OFFICE)	11 EMPLOYEES TOTAL (INCLUDING OFFICE)
TRUCKS PER DAY	2 CONCRETE MIXER TRUCK TRIPS PER DAY	2 CONCRETE MIXER TRUCK TRIPS PER DAY
	2 CEMENT POWDER TRUCKS PER MONTH	2 CEMENT POWDER TRUCKS PER MONTH
	5 AGGREGATE TRUCKS PER MONTH	5 AGGREGATE TRUCKS PER MONTH
TRUCK ACCESS ROUTE	HEAD NORTH ON BROADWAY STREET, TURN WEST ON LEWIS BROWN DRIVE, HEAD NORTH ON SONOMA BLVD. (CA-29), AND USE ONRAMP TO HIGHWAY 37.	HEAD NORTH ON BROADWAY STREET, TURN WEST ON LEWIS BROWN DRIVE, HEAD NORTH ON SONOMA BLVD. (CA-29), AND USE ONRAMP TO HIGHWAY 37.
MAXIMUM NOISE LEVELS	74 dB	74 dB

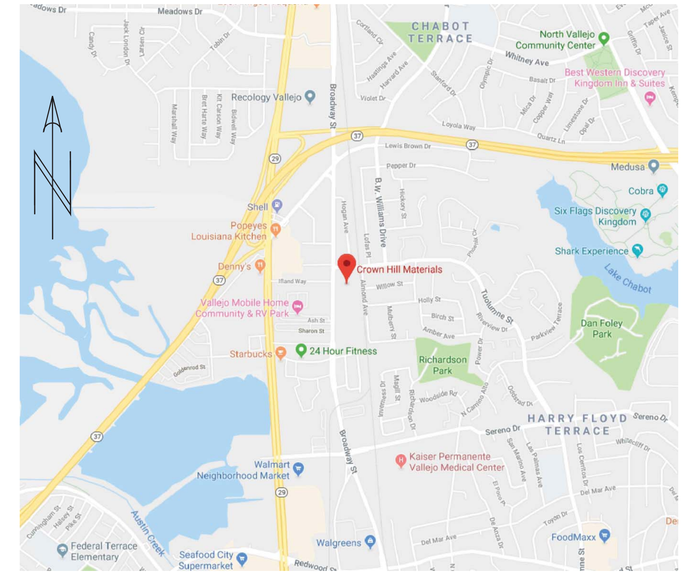

VICINITY MAP
(NOT TO SCALE)

LOT SIZE

APN 0052-090-170	1.00 ACRE
0052-090-210	1.00 ACRE
0052-090-220	0.95 ACRE
0052-090-230	0.96 ACRE
TOTAL	3.91 ACRE

GENERAL PLAN DESIGNATION – BUSINESS/LIGHT INDUSTRIAL

ZONING DISTRICT – INTENSIVE USE

ADJACENT LAND USE
NORTH – COMMERCIAL & RESIDENTIAL
EAST – SINGLE-FAMILY RESIDENCE
SOUTH – SINGLE FAMILY RESIDENCE
WEST – COMMERCIAL

EXISTING BUILDINGS – 21,780 SQ.FT.

PROPOSED FOUNDATION AREA – 2,772 SQ.FT. (REPLACED IMPERVIOUS SURFACE)

PROPOSED SIDEWALK AREA – 2,618 SQ.F.T (OUTSIDE OF PROPERTY)

PROPOSED LANDSCAPE AREA – 3,074 SQ.F.T (OUTSIDE OF PROPERTY)

EXISTING LANDSCAPE AREA – 1,285 SQ.FT.

PARKING
PROPOSED IS NON-OCCUPIED.
NO ADDITIONAL PARKING REQUIRED.

PROPOSED NEW IMPERVIOUS AREA – 4,000 SQ.FT.

EXISTING IMPERVIOUS SURFACES – 165,035 SQ.FT.

FLOOD ZONE – X (UNSHADED)

SEWER – N/A (BATCH PLANT DOES NOT CONNECT TO SEWER)

WATER – WATER SERVICES 2,500 GALLON WATER TANK ON APN 0052-090-210

PROPERTY INFORMATION
1888 BROADWAY STREET
VALLEJO, CA 94589

APN 0052-090-170
0052-090-210
0052-090-220
0052-090-230

PROPERTY OWNER
ZORA & BALWINDER SIDHU
39 CRAWFORD WAY
AMERICAN CANYON CA 94503
(707) 645-1320

CONTRACTOR
PRIME CONCRETE CONSTRUCTION
STATE LIC: 1003777
307 TEXAS STREET
VALLEJO, CA 94590
(707) 563-4549

ENGINEER
KJELSTROM & ASSOCIATES, INC.
841 KALPATI CIRCLE #A
CARLSBAD, CA 92008
(909) 275-5736

LEGEND
PROPERTY LINE
ELECTRICAL LINE
WATER LINE
EXISTING LIGHT POLE

WARNING: FIBER OPTIC AND/OR COPPER SIGNAL INTER CONNECT CABLES LOCATED AT THE EDGE OF THE ROADWAY OR UNDER THE SIDEWALK. IF THE CABLE IS DAMAGED, THE ENTIRE LENGTH OF THE CABLE BETWEEN THE TWO NEAREST HUBS WILL BE WILL BE REPLACED BY THE CONTRACTOR UNLESS OTHERWISE AUTHORIZED BY THE CITY ENGINEER.

C.3 COMPLIANCE TABLE

TOTAL PROJECT SITE AREA	170,320 SQ. FT.
TOTAL NEW IMPERVIOUS SURFACE AREA	4,000 SQ. FT.
TOTAL REPLACED IMPERVIOUS SURFACE AREA	2,772 SQ. FT.
TOTAL IMPERVIOUS SURFACE AREA	169,035 SQ. FT.
C.3 COMPLIANCE REQUIRED	YES

SHEET INDEX

DRAWING NO.	DESCRIPTION
1846-GA-001	SITE LAYOUT
1846-GA-002	PLANT LAYOUT
1846-GA-003	ADA COMPLIANCE LAYOUT
1846-DEM-001	DEMOLITION PLAN
1846-C-001	FOUNDATION LAYOUT
1846-C-002	FOUNDATION DETAILS
1846-C-003	PEDESTAL DETAILS

REGISTERED PROFESSIONAL ENGINEER SHAUN L. KJELSTROM C 76184 CIVIL STATE OF CALIFORNIA
6/30/20

No.	DATE	REVISION	BY
F	12-04-19	REVISED SURFACE AREA SQ.FT.	SLK
E	08-20-19	ADDED ADA COMPLIANCE	SLK
D	06-05-19	ADDED SIDEWALK ON BROADWAY AND DRIVEWAY	SLK
C	03-14-19	ADDED INFORMATION PER CITY COMMENTS	SLK
B	02-01-19	ADDED INFORMATION PER CITY	SLK
A	01-30-19	ISSUED FOR APPROVAL	SLK

KJELSTROM & ASSOCIATES, Inc.
841 KALPATI CIR. #A
CARLSBAD, CA 92008
(909) 275-5736 www.kjelstromassociates.com

CROWN HILL MATERIALS
1888 BROADWAY STREET
VALLEJO, CA 94589

SITE LAYOUT

disk PROJ. NO.

DRN.BY	CKD.BY	DATE	SHEET SIZE	DWG. NO.	REV.
SLK		01-30-19	24x36	1846-GA-001	F

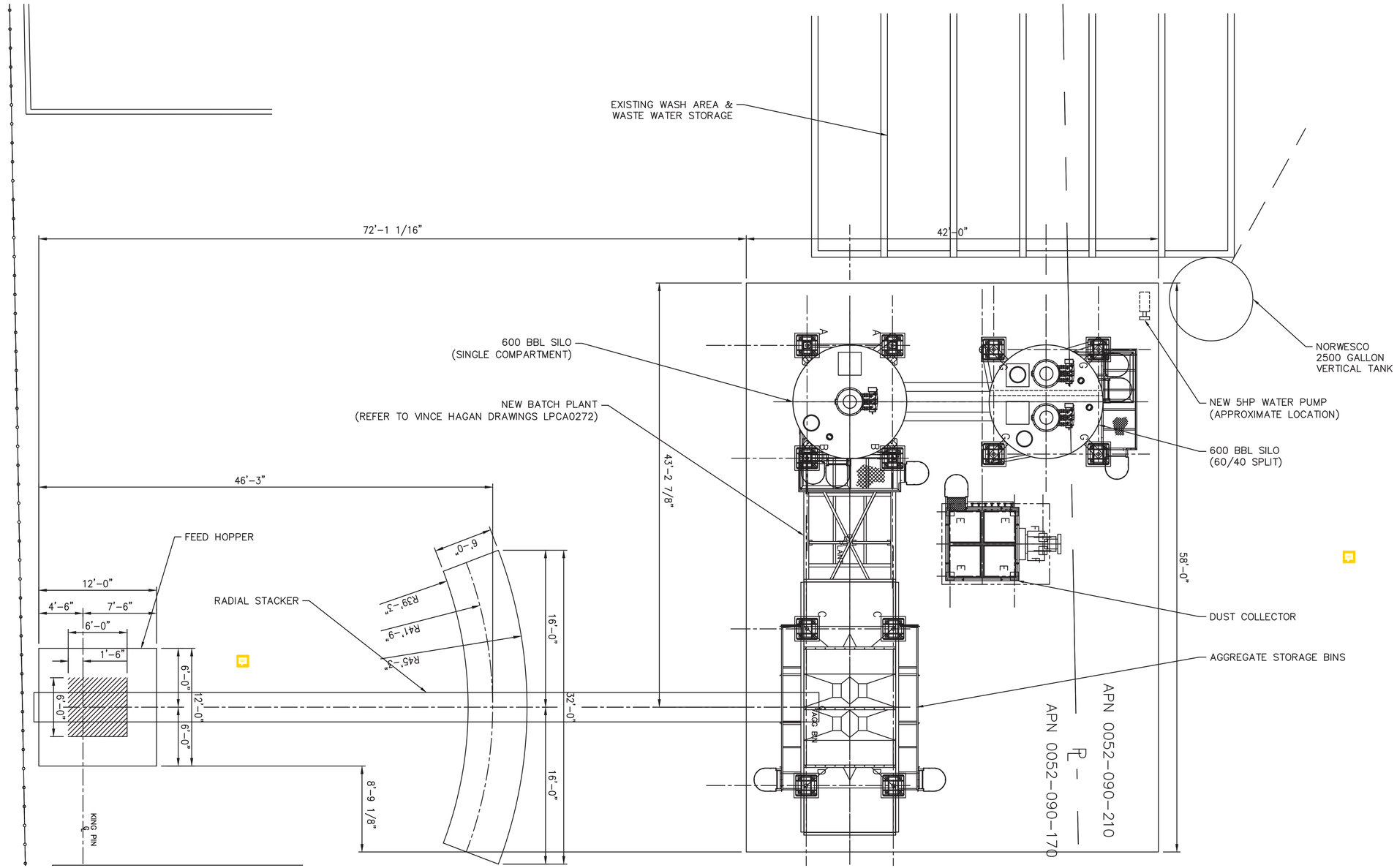

PLANT LAYOUT
(SCALE 1" = 5'-4")

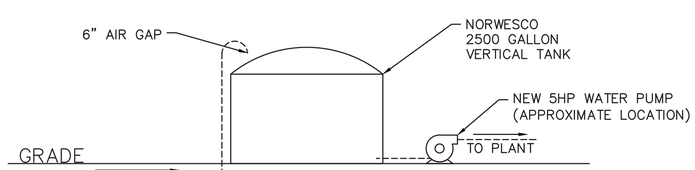

WATER TANK ELEVATION
(SCALE 1" = 4'-0")

No.	DATE	REVISION	BY
B	12-04-19	ADDED FEED HOPPER & RADIAL STACKER	SLK
A	03-14-19	ISSUED FOR APPROVAL	SLK

KJELSTROM & ASSOCIATES, Inc.
841 KALPATI CIR. #A
CARLSBAD, CA 92008
(909) 275-5736 www.kjelstromassociates.com

REGISTERED PROFESSIONAL ENGINEER
SHAUN L. KJELSTROM
C 76184
6/30/20
CIVIL
STATE OF CALIFORNIA

CROWN HILL MATERIALS
1888 BROADWAY STREET
VALLEJO, CA 94589

PLANT LAYOUT

disk PROJ. NO.

DRN.BY	CKD.BY	DATE	SHEET SIZE	DWG. NO.	REV.
SLK		03-14-19	24x36	1846-GA-002	B

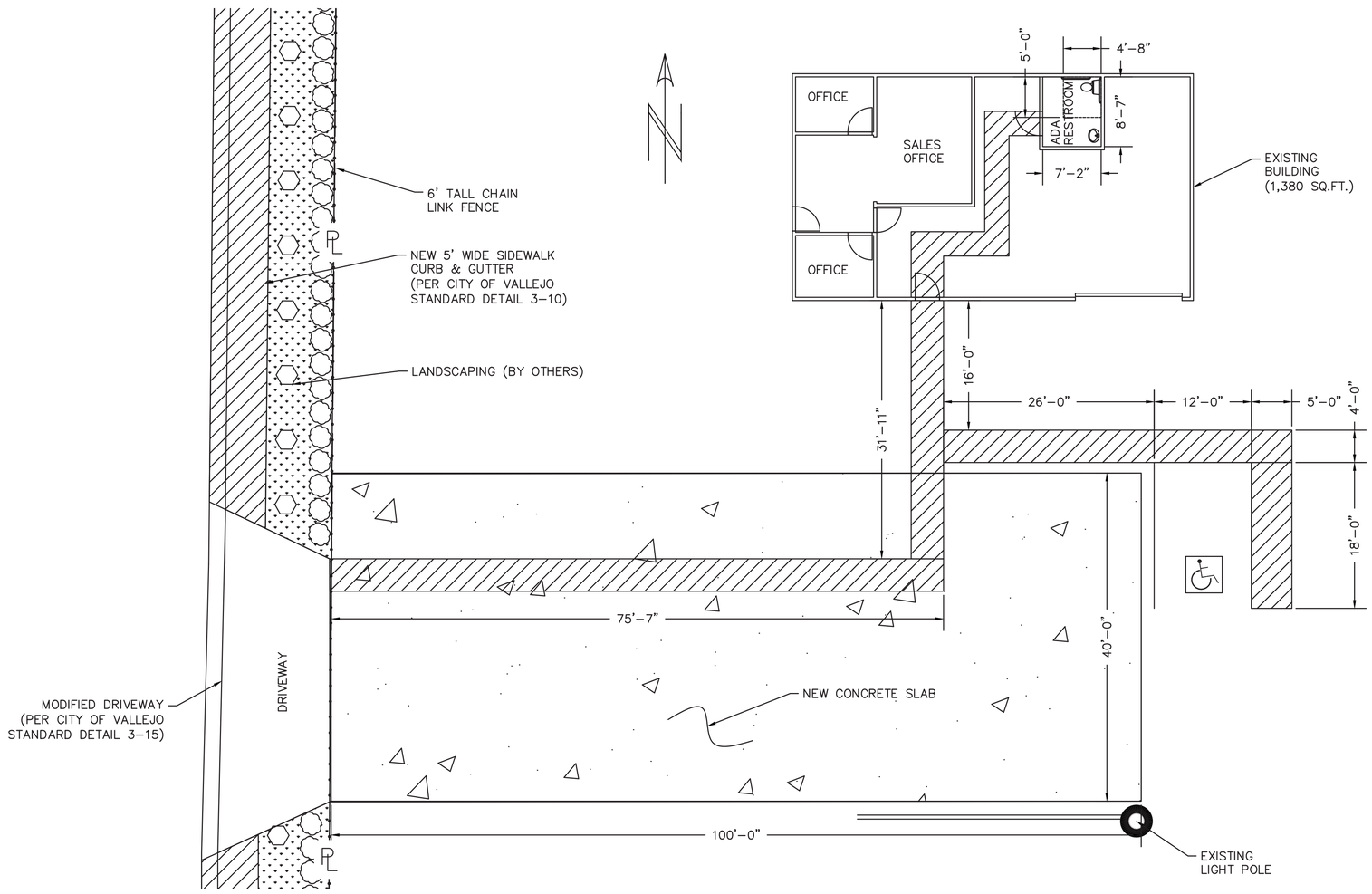

ADA COMPLIANCE LAYOUT
(SCALE 1" = 8'–0")

LEGEND

- PROPERTY LINE
- ELECTRICAL LINE
- WATER LINE
- EXISTING LIGHT POLE

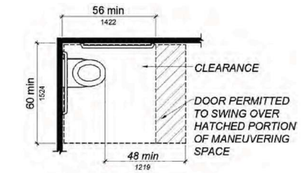

FIGURE *11B*-604.3.1
SIZE OF CLEARANCE AT WATER CLOSETS

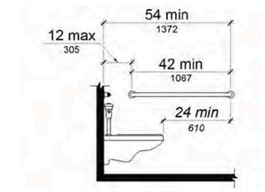

FIGURE *11B*-604.5.1
SIDE WALL GRAB BAR AT WATER CLOSETS

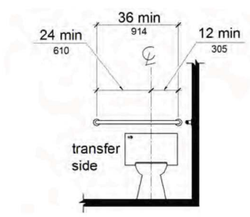

FIGURE *11B*-604.5.2
REAR WALL GRAB BAR AT WATER CLOSETS

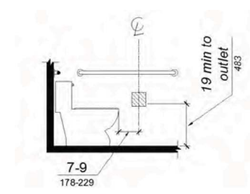

FIGURE *11B*-604.7
DISPENSER OUTLET LOCATION

No.	DATE	REVISION	BY
A	08–20–19	ISSUED FOR APPROVAL	SLK

KJELSTROM & ASSOCIATES, Inc.
841 KALPATI CIR. #A
CARLSBAD, CA 92008
(909) 275-5736 www.kjelstromassociates.com

REGISTERED PROFESSIONAL ENGINEER SHAUN L. KJELSTROM C 76184 CIVIL STATE OF CALIFORNIA
6/30/20

CROWN HILL MATERIALS
1888 BROADWAY STREET
VALLEJO, CA 94589

ADA COMPLIANCE LAYOUT

disk PROJ. NO.

DRN.BY	CKD.BY	DATE	SHEET SIZE	DWG. NO.	REV.
SLK		08–20–19	24x36	1846–GA–003	A

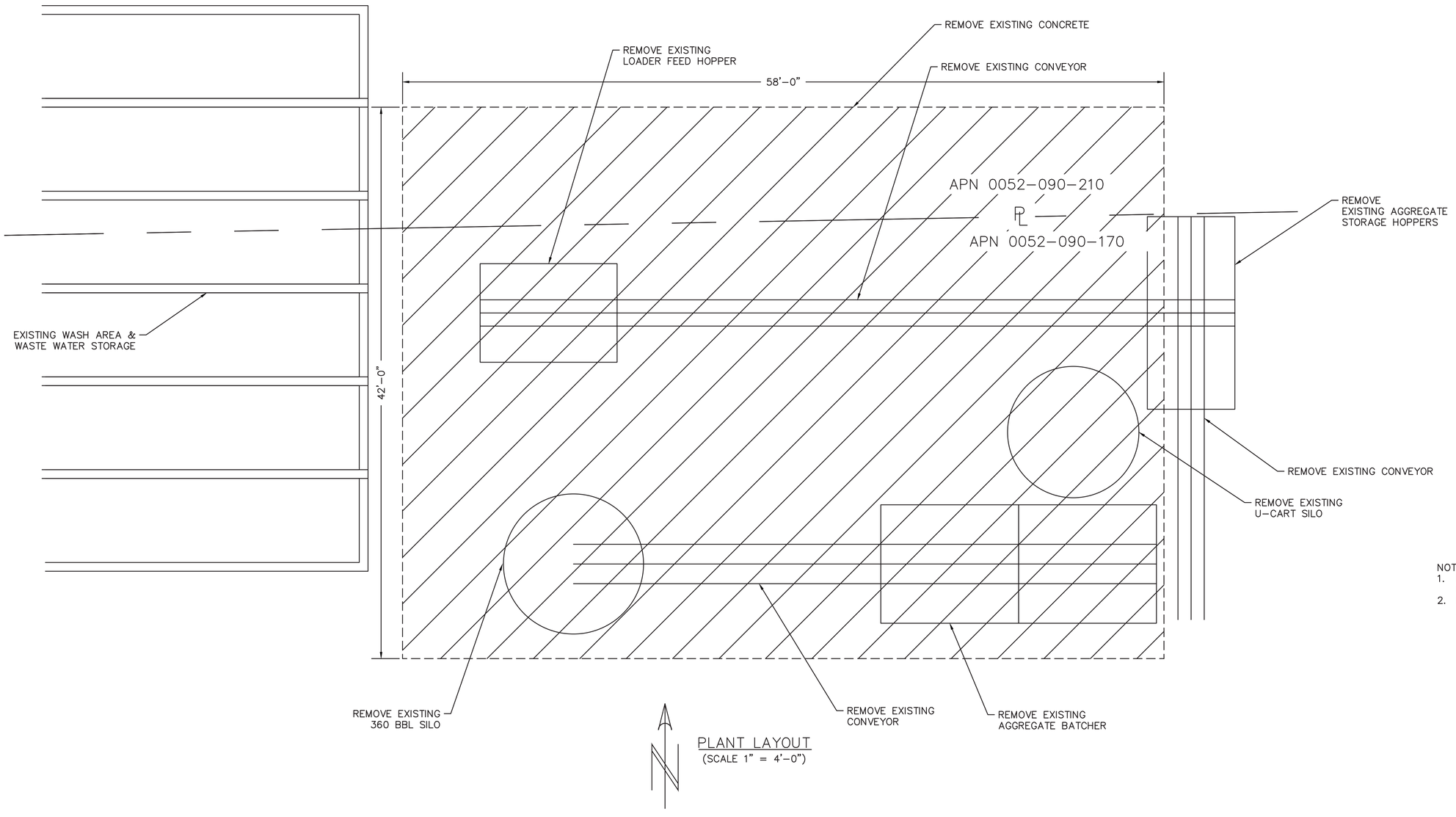

PLANT LAYOUT
(SCALE 1" = 4'-0")

NOTES:
1. EXISTING EQUIPMENT WILL REMAIN ON-SITE UNTIL SOLD.
2. EXISTING CONCRETE SHALL BE REMOVED AND DISPOSED BY CONTRACTOR.

No.	DATE	REVISION	BY
A	03-14-19	ISSUED FOR APPROVAL	SLK

KJELSTROM & ASSOCIATES, Inc.
841 KALPATI CIR. #A
CARLSBAD, CA 92008
(909) 275-5736 www.kjelstromassociates.com

REGISTERED PROFESSIONAL ENGINEER
SHAUN L. KJELSTROM
C 76184
6/30/20
CIVIL
STATE OF CALIFORNIA

CROWN HILL MATERIALS
1888 BROADWAY STREET
VALLEJO, CA 94589

DEMOLITION PLAN

disk PROJ. NO.

DRN.BY	CKD.BY	DATE	SHEET SIZE	DWG. NO.	REV.
SLK		03-14-19	24x36	1846-DEM-001	A

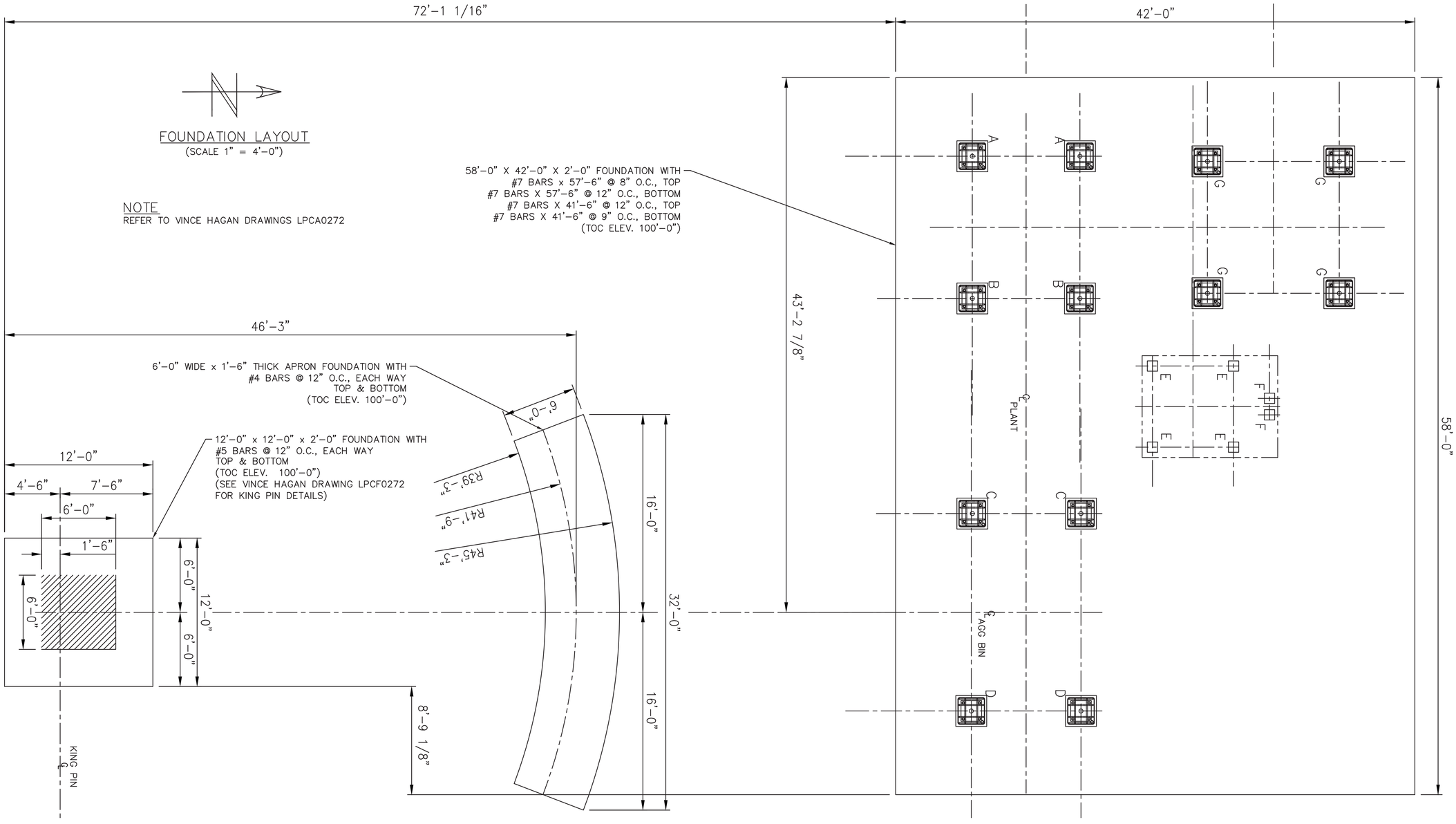

CONCRETE NOTES:

1. CONCRETE SHALL CONTAIN 5 MIN SACKS MIN OF TYPE V PORTLAND CEMENT PER EACH CUBIC YARD. MIX TO BE DESIGNED FOR 4" MAX. SLUMP, EXCEPT FOR PUMP MIXES; WHICH SHALL HAVE 6" MAX. SLUMP. ALL CONCRETE SHALL BE VIBRATED WITH MECHANICAL, HIGH-FREQUENCY VIBRATORS AFTER PLACEMENT. ALL CONCRETE SHALL BE WATER CURED FOR 7 DAYS (CURING COMPOUNDS MAY BE USED IN LIEU OF WATER IF APPROVED BY PROJECT ENGINEER). CONSTRUCTION JOINTS SHALL BE SANDBLASTED PRIOR TO SUBSEQUENT POURS.
2. MAXIMUM SIZE AGGREGATE FOR CONCRETE SHALL BE 1"
3. ALL CONCRETE REINFORCING STEEL SHALL BE DEFORMED BARS CONFORMING WITH ASTM A615, GRADE 60. BAR SPLICES SHALL BE 60 DIAMETERS, U.N. CONTINUOUS BARS SHALL BE FULL LENGTH OR HAVE STAGGERED SPLICES. ALL BARS REQUIRING BENDING SHALL BE BENT COLD AND IN ACCORDANCE WITH A.C.I. SPECIFICATIONS.
4. UNLESS OTHERWISE NOTED, CONCRETE COVER SHALL BE 3" FOR CONCRETE POURED DIRECTLY AGAINST EARTH. ELSEWHERE, COVER SHALL BE 2" FOR MAIN REINFORCEMENT AND A MIN. OF 1 1/2" FOR ANY BAR. THE CLEAR DISTANCE BETWEEN PARALLEL BARS SHALL NOT BE LESS THAN THE NOMINAL BAR DIAMETER, 1 1/2 TIMES THE SIZE OF THE MAXIMUM AGGREGATE, OR 1" MINIMUM. ALL CONCRETE REINFORCEMENT, ANCHOR BOLTS, EMBEDS, ETC., SHALL BE ACCURATELY PLACED AND POSITIVELY SECURED BEFORE CONCRETE PLACEMENT IS BEGUN. ALL REINFORCEMENT, ANCHOR BOLTS, EMBEDS, ETC., TO BE FREE OF OIL, GREASE, DIRT, PAINT AND/OR LOOSE RUST BEFORE PLACING CONCRETE.
5. ALL STRUCTURAL STEEL FOR ANCHOR BOLTS AND EMBEDS TO BE ASTM A307. ALL ANCHOR BOLTS TO BE PROVIDED AND SHIPPED COMPLETE WITH TWO (2) HEX NUTS, ONE (1) HALF NUT, AND TWO (2) WASHERS, U.N.
6. PRIOR TO CONCRETE PLACEMENT, ALL FORMS, REINFORCEMENT, ANCHOR BOLTS, EMBEDS, ETC., SHALL BE INSPECTED. CONTINUOUS INSPECTION OF CONCRETE PLACEMENT SHALL BE PROVIDED IN CONFORMANCE WITH THE 2016 C.B.C.
7. ALL CONCRETE IS DESIGNED FOR fc= 2,500 PSI @ 28 DAYS, U.N. CONCRETE SHALL BE fc= 3,000 PSI @ 28 DAYS, U.N.
8. DESIGN SOIL BEARING PRESSURE IS 1,500 PSF PER GEOTECHNICAL ENGINEERING INVESTIGATION BY ENVIRON ASSESSMENT, PC PROJECT 2018-08-026, DATED OCTOBER 3, 2018.
9. PRIOR TO PLACEMENT OF REINFORCING STEEL AND CONCRETE, UNDERLYING SOILS ARE TO BE PREPARED IN ACCORDANCE WITH THE GEOTECHNICAL ENGINEERING INVESTIGATION BY ENVIRON ASSESSMENT, PC PROJECT 2018-08-026, DATED OCTOBER 3, 2018.
10. ALL CONCRETE EXPOSED CORNERS AND EDGES TO BE CHAMFERED 1/4", U.N.
11. NO BACKFILLING AGAINST OR LOADING ON STRUCTURAL CONCRETE SHALL OCCUR UNTIL CONCRETE HAS REACHED ITS DESIGN STRENGTH. PLACEMENT OF BACKFILLING IS BY CONTRACTOR. BACKFILL SHALL BE COMPACTED TO 90% RELATIVE DENSITY, U.N.
12. ALL REINFORCING STEEL FABRICATION AND PLACING DRAWINGS SHALL BE SUBMITTED TO OWNER FOR REVIEW AND APPROVAL PRIOR TO FABRICATION.
13. ALL CONSTRUCTION JOINTS SHALL BE CLEANED OF ALL DIRT AND LAITANCE. JOINTS SHALL BE THOROUGHLY WETTED IMMEDIATELY PRIOR TO PLACEMENT OF NEW CONCRETE.

APPLICABLE CODES AND STANDARDS

1. CALIFORNIA BUILDING CODE (CBC):
   TITLE 24 OF THE CALIFORNIA CODE OF REGULATIONS (2016 CBC, VOL 2A), BASED ON THE 2015 INTERNATIONAL BUILDING CODE.
2. AMERICAN SOCIETY OF CIVIL ENGINEERS (ASCE) / STRUCTURAL ENGINEERING INSTITUTE (SEI):
   ASCE/SEI 7-10, MINIMUM DESIGN LOADS FOR BUILDINGS AND OTHER STRUCTURES
3. AMERICAN CONCRETE INSTITUTE (ACI):
   ACI 318-14, BUILDING CODE REQUIREMENTS FOR STRUCTURAL CONCRETE
4. AMERICAN INSTITUTE OF STEEL CONSTRUCTION (AISC):
   AISC 341-10, SEISMIC PROVISIONS FOR STRUCTURAL STEEL BUILDINGS INCLUDING SUPPLEMENT NO. 1
   AISC 360-10, SPECIFICATION FOR STRUCTURAL STEEL BUILDINGS
5. AMERICAN WELDING SOCIETY (AWS):
   D1.1-10/D1.3-08/D1.4-11, STRUCTURAL WELDING CODE
6. AMERICAN SOCIETY FOR TESTING AND MATERIALS (ASTM):
   ALL ASTM REFERENCES NOTED
7. ALONG WITH CITY ORDINANCES AND ANY OTHER APPLICABLE LOCAL AND STATE LAWS AND REGULATIONS.
8. ALL OTHER LOCAL AND STATE AGENCIES HAVING JURISDICTION OVER THIS PROJECT.

DESIGN LOADS

1. DEAD LOAD - ACTUAL WEIGHT OF MATERIALS OF CONSTRUCTION USED.
2. LIVE LOAD - LOAD PRODUCED BY PARTICULAR USE AND OCCUPANCY OF STRUCTURE:

AGGREGATE	110 pcf
CEMENTITIOUS MATERIAL	94 pcf

3. WIND LOAD

BASIC WIND SPEED, V	100 mph
WIND EXPOSURE	D

4. SEISMIC LOAD

RISK CATEGORY	I
IMPORTANCE FACTOR	1.0
SITE CLASS	D
DESIGN SPECTRAL RESPONSE ACCELERATIONS:	
AT SHORT PERIOD, SDS	1.239g
AT 1-SECOND PERIOD, SD1	0.665g
SEISMIC DESIGN CATEGORY	D
BASIC SEISMIC FORCE-RESISTING SYSTEM	ELEVATED VESSEL (ASCE 7-10, TABLE 15.4-2)
RESPONSE MODIFICATION FACTOR, R	3.0
DESIGN BASE SHEAR	V=0.413 W
ANALYSIS PROCEDURE	EQUIVALENT LATERAL FORCE PROCEDURE

MATERIALS OF CONSTRUCTION

1. NORMALWEIGHT CONCRETE:	
DESIGNED FOR 28-DAY COMPRESSIVE STRENGTH	f'c = 2,500 PSI
USE 28-DAY COMPRESSIVE STRENGTH	f'c = 3,000 PSI
2. REINFORCING STEEL:	
ASTM A615 GR. 60	fy = 60 ksi
3. REINFORCING WELDED STEEL:	
ASTM A706 GR. 60	fy = 60 ksi
4. WELDED WIRE FABRIC:	
ASTM A815	fy = 65 ksi
5. STRUCTURAL STEEL	
5.1. WIDE FLANGE AND TEE SHAPES:	
ASTM A992	fy = 50 ksi
5.2. ANGLES, CHANNELS, AND PLATES:	
ASTM A36	fy = 36 ksi
5.3. HSS RECTANGULAR & PIPE:	
ASTM A500 GR. B	fy = 46 ksi
6. BOLTS:	
ASTM A325	fy = 36 ksi
7. ANCHOR BOLTS:	
ASTM A307	fy = 36 ksi
8. NUTS:	
ASTM A563 GR. D	
9. WELDING ELECTRODES:	
E70XX	

GENERAL NOTES:

1. ALL WORK SHALL CONFORM TO THE 2016 EDITION OF THE CALIFORNIA BUILDING CODE
2. CONTRACTORS SHALL BE RESPONSIBLE FOR NECESSARY FIELD INSTALLATION CLEARANCES. ANY DESIGN DETAILS CONSIDERED NOT TO BE WORKABLE SHALL BE REFERRED TO THE OWNER'S ENGINEER OR REPRESENTATIVE FOR DISPOSITION.
3. CONTRACTOR TO FIELD VERIFY ALL DIMENSIONS BEFORE FABRICATION AND/OR CONSTRUCTION. ANY DISCREPANCY BETWEEN FIELD CONDITIONS AND THESE DRAWINGS SHALL BE IMMEDIATELY BROUGHT TO THE ATTENTION OF THE ENGINEER OR OWNER'S REPRESENTATIVE.

STRUCTURAL STEEL:

1. STRUCTURAL AND MISCELLANEOUS STEEL SHALL CONFORM TO ASTM A36 EXCEPT WF WHICH SHALL CONFORM TO ASTM A992.
2. ALL STRUCTURAL STEEL BOLTS SHALL BE A325X BOLTS, U.N.O. ALL BOLTS TO BE BEARING TYPE WITH THREADS EXCLUDED FROM THE SHEAR PLANE. BOLTED CONNECTIONS TO HAVE WASHERS ON BOTH SIDES.
3. A DEPUTY INSPECTOR SHALL PROVIDE SPECIAL INSPECTION ON ALL HIGH STRENGTH BOLTING IN ACCORDANCE WITH C.B.C. CHAPTER 17 AND AISC 360, TABLES N5.6-1 TO N5.6-3.

WELDING:

1. ALL WELDING SHALL BE PERFORMED BY OPERATORS CERTIFIED IN ACCORDANCE WITH THE REQUIREMENTS OF THE AMERICAN WELDING SOCIETY, FOR THE TYPE OF WELDING TO BE PERFORMED. WELDING IS TO BE PERFORMED BY MEANS OF THE ELECTRIC ARC PROCESS.
2. ARC-WELD ELECTRODES SHALL CONFORM TO ASTM A233 CLASS E70xx. ALL WELDS MUST BE ABLE TO PASS A NOTCH-TOUGHNESS TEST OF 20 PLF.
3. ALL WELDERS TO BE CERTIFIED.
4. A DEPUTY INSPECTOR SHALL PROVIDE SPECIAL INSPECTION ON ALL WELDS IN ACCORDANCE WITH C.B.C. CHAPTER 17 AND AISC 360, TABLES N5.4-1 TO N5.4-3.
5. ALL WELDING TO BE CLEANED PER SSPC-SP3, POWER TOOL CLEANING AND ALL ROUGH & SHARP EDGES TO GROUND SMOOTH.

PAINT:

1. AFTER CLEANING, TOUCH UP W/ SHERWIN-WILLIAMS UNIVERSAL METAL PRIMER.
2. SHERWIN-WILLIAMS FAST DRY ACRYLIC ENAMEL IS TO BE USED AS FINISH PAINT, OR APPROVED EQUAL.
3. MATCH NEW PAINT COLOR TO EXISTING COLOR SCHEME.

REGISTERED PROFESSIONAL ENGINEER
SHAUN L. KJELSTROM
C 76184
6/30/20
CIVIL
STATE OF CALIFORNIA

No.	DATE	REVISION	BY
C	12-04-19	ADDED APRON AND 12'x12' FOUNDATION	SLK
B	03-14-19	REMOVED APRON AND 12'x12' FOUNDATION	SLK
A	10-11-18	ISSUED FOR APPROVAL	SLK

KJELSTROM & ASSOCIATES, Inc.
841 KALPATI CIR. #A
CARLSBAD, CA 92008
(909) 275-5736 www.kjelstromassociates.com

CROWN HILL MATERIALS
1888 BROADWAY STREET
VALLEJO, CA 94589

FOUNDATION LAYOUT

disk PROJ. NO.

DRN.BY	CKD.BY	DATE	SHEET SIZE	DWG. NO.	REV.
SLK		10-11-18	24x36	1846-C-001	C

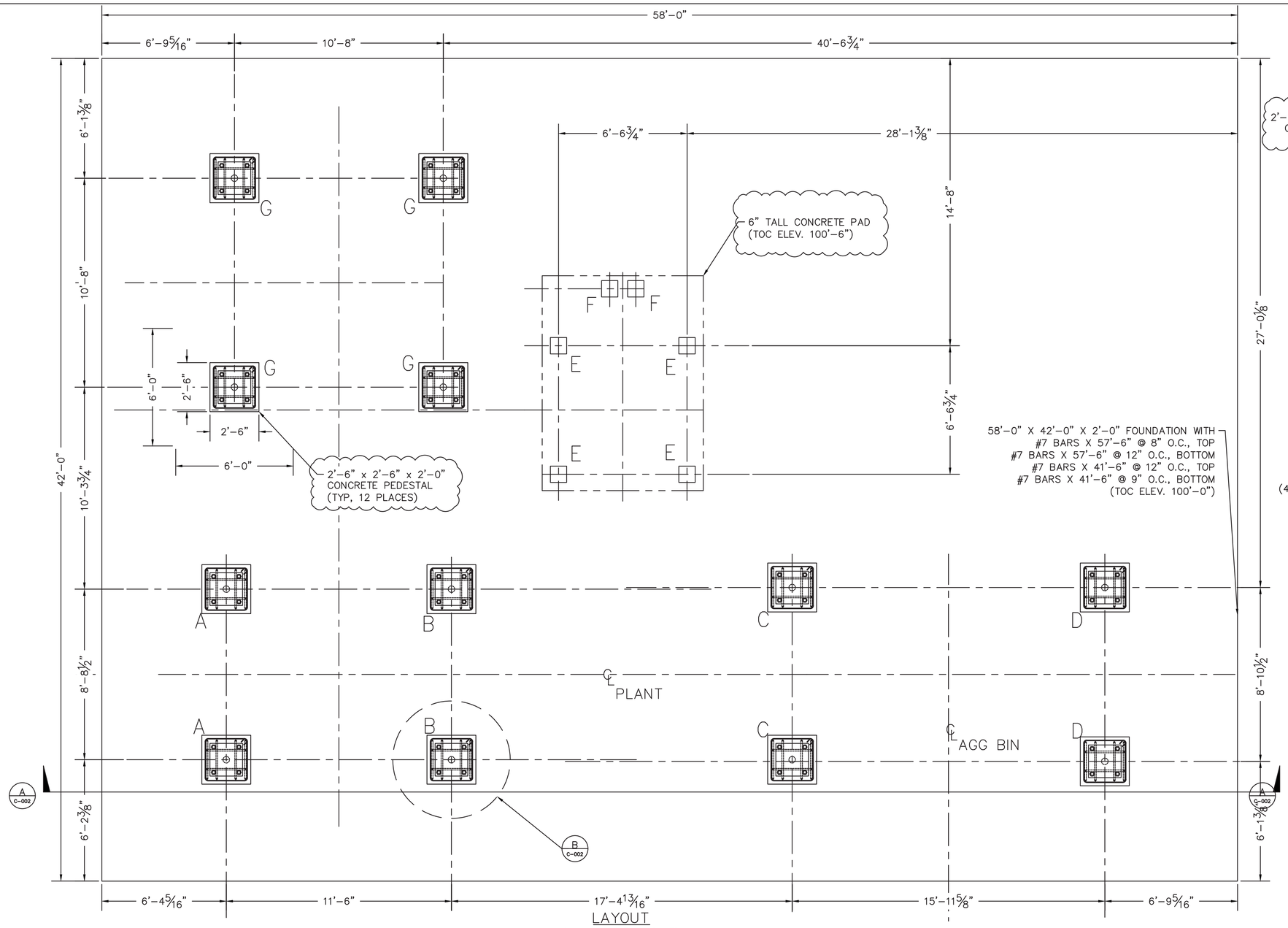

LAYOUT
(SCALE 3/8" = 1'-0")

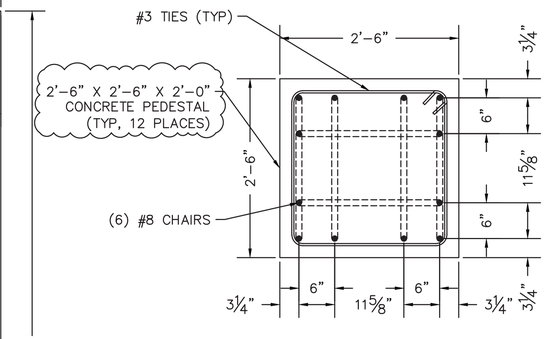

DETAIL-B
(SCALE 1" = 1'-0")

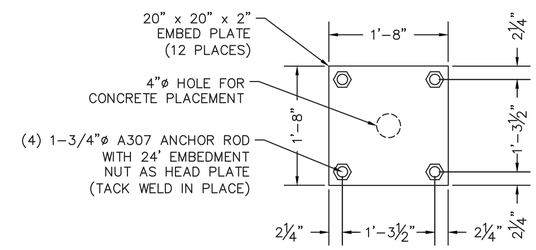

TYPICAL EMBED PLATE DETAIL
(SCALE 1" = 1'-0")

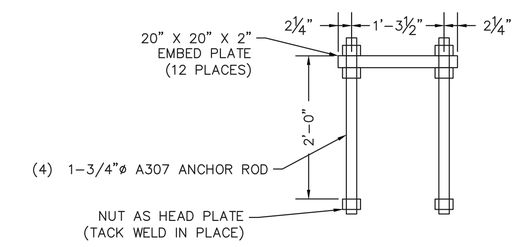

TYPICAL ANCHOR DETAIL
(SCALE 1" = 1'-0")

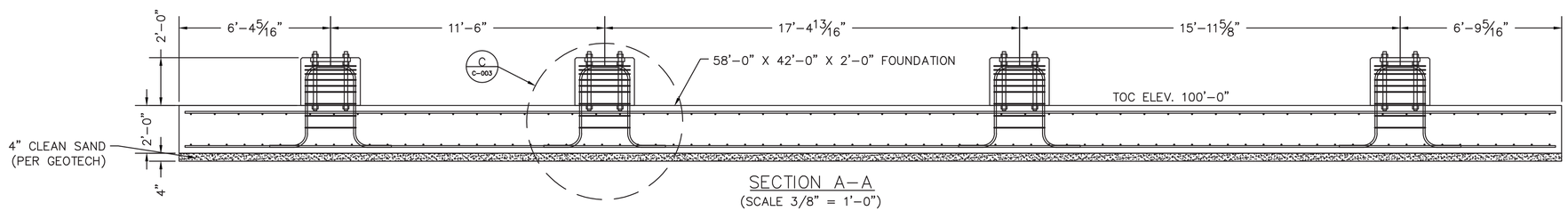

SECTION A-A
(SCALE 3/8" = 1'-0")

No.	DATE	REVISION	BY
C	08-20-19	ADDED NUTS TO ANCHOR BOLTS	SLK
B	10-26-18	RAISED PEDESTALS	SLK
A	10-11-18	ISSUED FOR APPROVAL	SLK

KJELSTROM & ASSOCIATES, Inc.
841 KALPATI CIR. #A
CARLSBAD, CA 92008
(909) 275-5736 www.kjelstromassociates.com

REGISTERED PROFESSIONAL ENGINEER
SHAUN L. KJELSTROM
C 76184
6/30/20
CIVIL
STATE OF CALIFORNIA

CROWN HILL MATERIALS
1888 BROADWAY STREET
VALLEJO, CA 94589

FOUNDATION DETAILS

disk PROJ. NO.

DRN.BY	CKD.BY	DATE	SHEET SIZE	DWG. NO.	REV.
SLK		10-11-18	24x36	1846-C-002	C

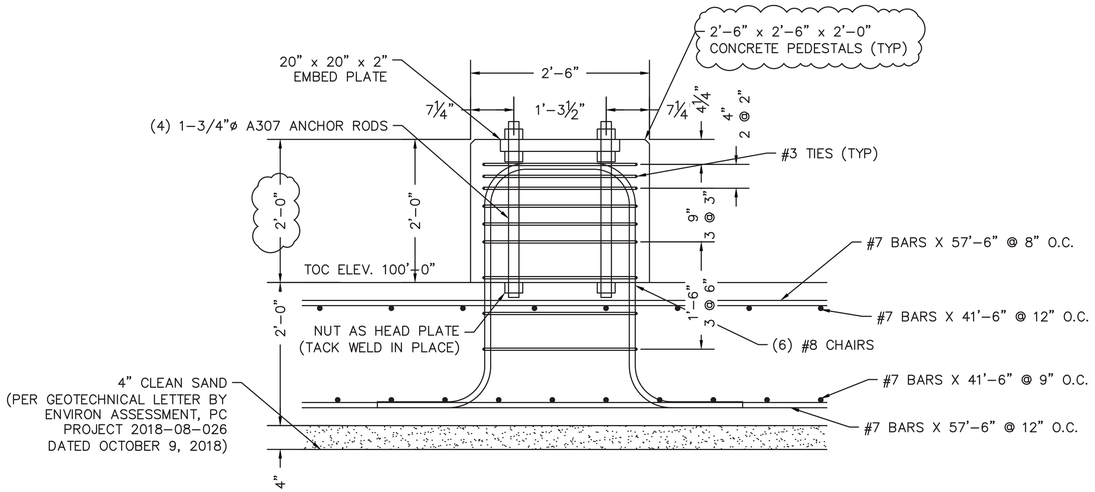

DETAIL-C
(SCALE 1" = 1'-0")

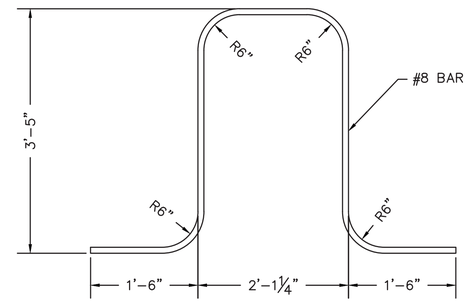

TYPICAL #8 CHAIR DETAIL
(SCALE 1" = 1'-0")
(72 TOTAL)

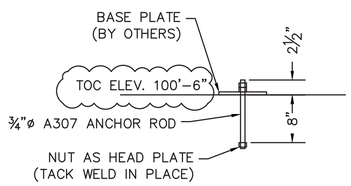

DUST COLLECTOR ANCHOR DETAIL
(SCALE 1" = 1'-0")
(6 TOTAL)

No.	DATE	REVISION	BY
C	08-20-19	ADDED NUTS TO ANCHOR BOLTS	SLK
B	10-26-18	RAISED PEDESTALS	SLK
A	10-11-18	ISSUED FOR APPROVAL	SLK

KJELSTROM & ASSOCIATES, Inc.
841 KALPATI CIR. #A
CARLSBAD, CA 92008
(909) 275-5736 www.kjelstromassociates.com

REGISTERED PROFESSIONAL ENGINEER
SHAUN L. KJELSTROM
C 76184
6/30/20
CIVIL
STATE OF CALIFORNIA

CROWN HILL MATERIALS
1888 BROADWAY STREET
VALLEJO, CA 94589

PEDESTAL DETAILS

disk PROJ. NO.

DRN.BY	CKD.BY	DATE	SHEET SIZE	DWG. NO.	REV.
SLK		10-11-18	24x36	1846-C-003	C

BILL OF MATERIALS				
ITEM	QTY.	DESCRIPTION	WT.	REMARKS
1	1	100 TON AGG. BIN, 4 COMPARTMENT		
2	1	AGG. FRAME ASS'Y		
3	1	AGG. BATCHER ASS'Y		
4	1	AIR COMPRESSOR 15 HP		
5	1	CONVEYOR ASS'Y, 30"		
6	1	REMOVEABLE AXLE ASS'Y (AGG. SECTION)		
7	1	CEMENT SUPPORT FRAME		
8	1	CEMENT BATCHER W/VH-14 BATCHER VENT		
9	1	DISCHARGE HOOD		
10	1	CEMENT SILO, 600 BBL SINGLE		
11	1	LOWER SILO SUPPORT		
12	1	SILO LADDER		
13	1	LOWER PLATFORM		
14	2	LOWER LADDER		
15	6	HIGH & MID LEVEL ADJUSTABLE INDICATOR		
16	3	RELIEF VALVE		
17	1	VH-1094JP DUST COLLECTOR W/ DUST RECLAIM (S/N 180706)		
18	3	5" FILL PIPE W/ 4" CAM-LOCK ADAPTOR		
19	1	WATER SYSTEM		
20	1	30" x 80' RADIAL STACKER (S/N 180707)		
21	1	DUST SHROUD		
22	3	VH-245JP SILO TOP DUST COLLECTOR		
23	1	AUX SILO, 600 BBL SPLIT 60/40 (S/N 180708)		
24	1	AUX SILO SUPPORT		
25	2	10" x 20' SCREWFEEDER		
26	1	3" DUST RETURN PIPE		
27	1	AERATION BLOWER		
28	1	3" WATER PUMP		
29	1	AGGREGATE PLATFORMS W/LADDERS		

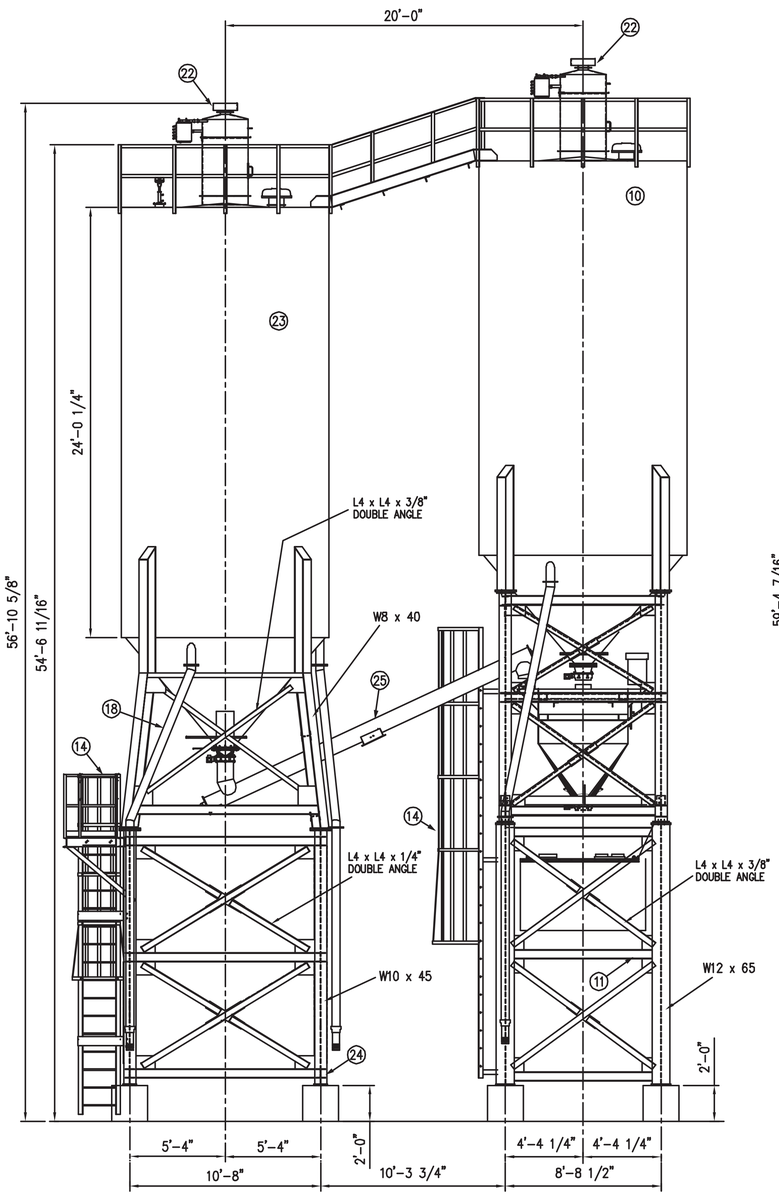

FRONT VIEW
(LOOKING EAST)
NOTE: DUST COLLECTOR NOT SHOWN IN THIS VIEW.

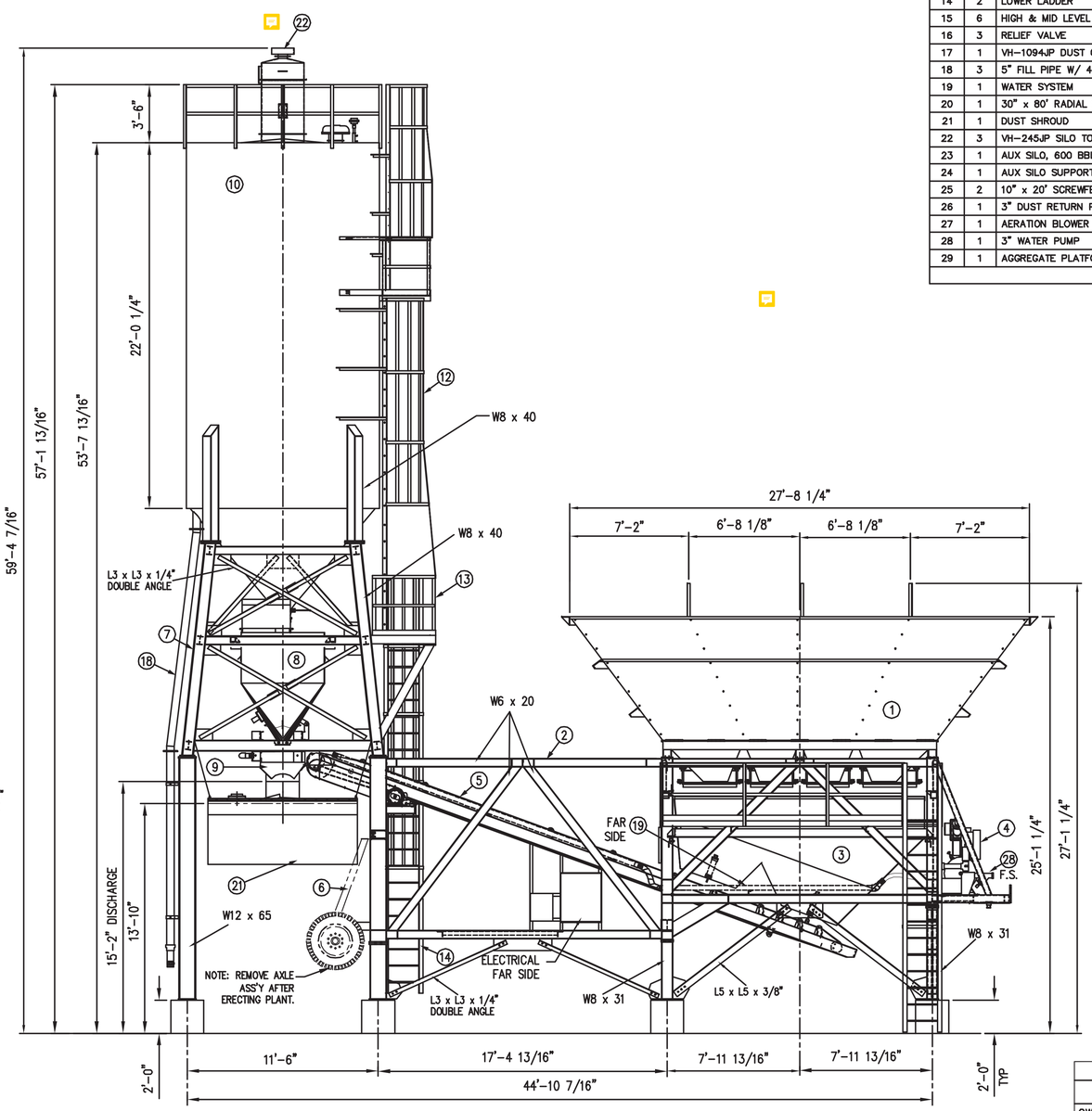

SIDE VIEW
(LOOKING NORTH)
NOTE: WATER BATCHER AND DUST COLLECTOR NOT SHOWN IN THIS VIEW.

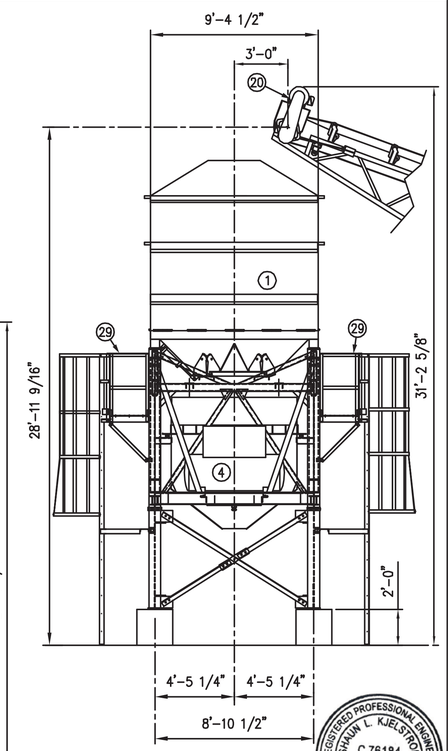

END VIEW
(LOOKING WEST)

REGISTERED PROFESSIONAL ENGINEER SHAUN L. KJELSTROM C 76184 6/30/20 CIVIL STATE OF CALIFORNIA

THIS DRAWING IS THE PROPERTY OF THE VINCE HAGAN CO. AND SHALL NOT BE USED NOR REPRODUCED EITHER WHOLLY OR IN PART EXCEPT WHERE AUTHORIZED. ALL RIGHTS OF DESIGN OR INVENTION ARE RESERVED.

REV.	BY	DATE	DESCRIPTION
D	J.S.	11/12/19	ADDITIONAL HEIGHT DIMENSIONS
C	S.T	2/4/19	ADDED MODIFYING NOTES
B	J.S.	10/25/18	MODIFIED PER SPEC SHEET
A	J.S.	9/28/18	MODIFIED PER CHANGE ORDER

MADE FROM	REV.	THE VINCE HAGAN COMPANY DALLAS, TEXAS
JOB# 180705		
OWNER	CROWN HILL MATERIALS	
DIST.		
MODEL NO.	LP12B-100/4-600-600	
TITLE	PLANT GENERAL ARRANGEMENT	

DWN. BY	CKD. BY	DATE REL.	SCALE	DRAWING NO.
9/21/18	J.S.	10/29/18	1/4"=1'-0"	LPCA0272 SHT 1 OF 2

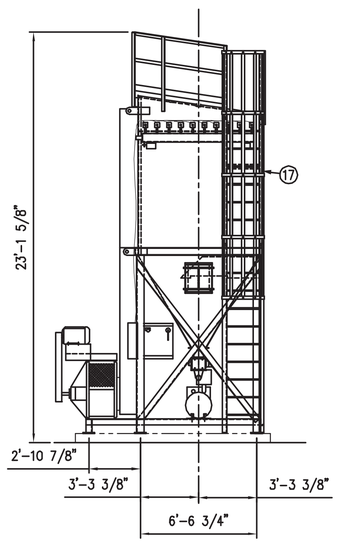

(LOOKING EAST)

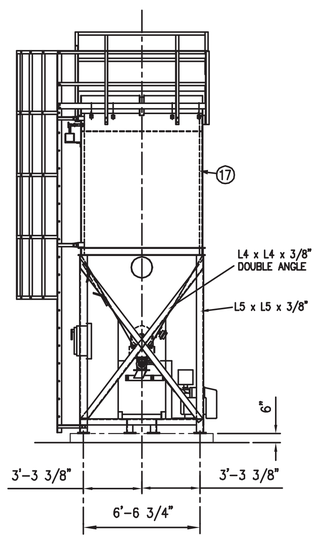

VIEW A-A

(LOOKING NORTH)

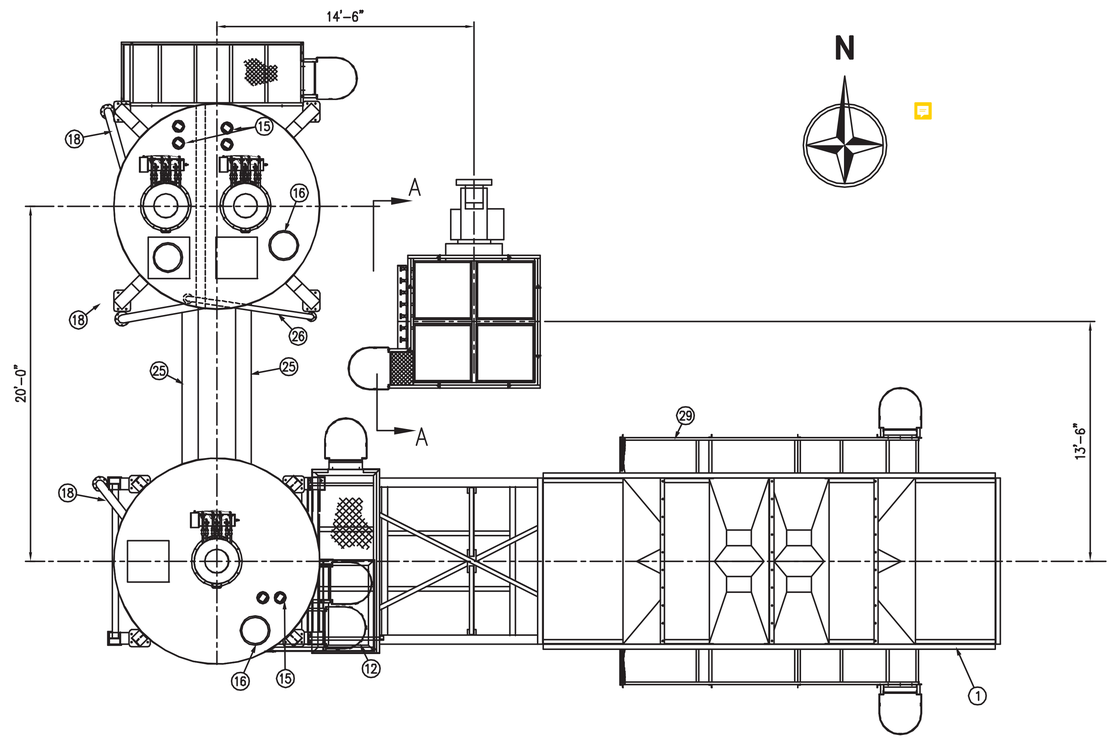

PLAN VIEW

NOTE: RADIAL STACKING CONVEYOR
NOT SHOWN IN THIS VIEW.

REGISTERED PROFESSIONAL ENGINEER
SHAUN L. KJELSTROM
C 76184
6/30/20
CIVIL
STATE OF CALIFORNIA

THIS DRAWING IS THE PROPERTY OF THE VINCE HAGAN CO. AND SHALL NOT BE USED NOR REPRODUCED EITHER WHOLLY OR IN PART EXCEPT WHERE AUTHORIZED. ALL RIGHTS OF DESIGN OR INVENTION ARE RESERVED.

REV.	BY	DATE	DESCRIPTION
D	J.L.	11/12/19	ADDITIONAL HEIGHT DIMENSIONS
C	S.T	2/4/19	ADDED MODIFYING NOTES
B	J.L.	10/25/18	MODIFIED PER SPEC SHEET
A	J.L.	9/28/18	MODIFIED PER CHANGE ORDER

MADE FROM	REV.	THE VINCE HAGAN COMPANY
JOB# 180705		DALLAS, TEXAS

OWNER: CROWN HILL MATERIALS

DIST.

MODEL NO.: LP12B-100/4-600-600

TITLE: PLANT GENERAL ARRANGEMENT

DWN. BY	CKD. BY	DATE REL.	SCALE	DRAWING NO.
TJE 9/21/18	J.S.	10/29/18	1/4"=1'-0"	LPCA0272 SHT 2 OF 2

BILL OF MATERIALS			
ITEM	QTY.	DESCRIPTION	DRAWING NUMBER
1	1	30" TAIL SECTION	SCTB-004
2	1	30" MID-SECTION x 30'-0"	SCTB-007
3	1	30" MID-SECTION x 20'-0"	SCTB-009
4	1	30" HEAD SECTION	SCTB-003
5	2	SUPPORT BEAM x 32'-0"	RSTBJ004
6	1	REAR BRACE	RSTBJ004
7	1	CENTER BRACE	RSTBJ004
8	1	FRONT BRACE	RSTBJ004
9	1	AXLE	RSTB-012
10	1	RADIAL DRIVE	RSTP-005
11	1	10'-0" x 10'-0" LOADING HOPPER	RSTP-003
12	1	30" SKIRTBOARDS	RSTP-004
13	1	POWER BOX LOCATION	RSTP-001
14	1	WING PULLEY GUARD	RSTB-013
15	4	WIND LOOP	SCTB-003
16	1	BELT DRIVE ASSEMBLY	RSTBF010
17			
18			
19			
20			

APPROX WT = 14000 #

NOTE: PLANT SHOWN IS TYPICAL AND MAY NOT MATCH YOUR PLANT. SEE THE PLANT GENERAL ARRANGEMENT FOR YOUR PLANT DIMENSIONS.

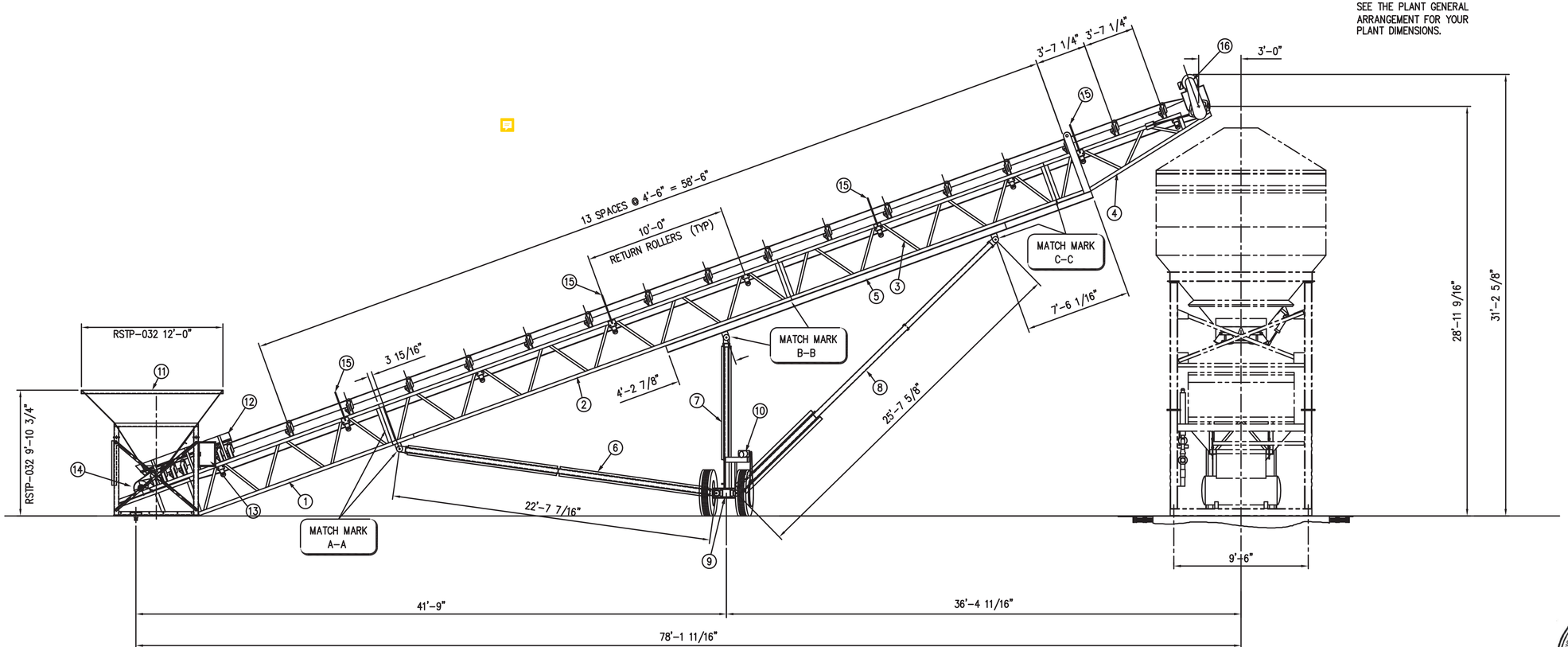

(VIEW LOOKING EAST)

REGISTERED PROFESSIONAL ENGINEER SHAUN L. KJELSTROM C 76184 6/30/20 CIVIL STATE OF CALIFORNIA

REV.	BY	DATE	DESCRIPTION
A	DC	12/10/96	REVISED BOM

MADE FROM	REV.	THE VINCE HAGAN COMPANY DALLAS, TEXAS			
OWNER					
DIST.					
MODEL NO.	30" x 80'-0" RADIAL STACKER				
TITLE	GENERAL ARRANGEMENT				
DWN. BY	CKD. BY	DATE REL.	SCALE	DRAWING NO.	
DAN HERBST 23 SEPT 1996	J.S.	27 SEPT 1996	1/4"=1'-0"	RSTBJ003	

LANDSCAPE RENOVATION PLANS FOR

CROWN HILL MATERIALS

1888 BROADWAY STREET
VALLEJO, CA 94589

TEAM CONTACTS

PROPERTY OWNER:
ZORA AND BALWINDER SIDHU
39 CRAWFORD WAY
AMERICAN CANYON, CA 94503
PHONE: (707) 645-1320

CONTRACTOR:
PRIME CONCRETE CONSTRUCTION
STATE LICENSE #: 1003777
307 TEXAS STREET
VALLEJO, CA 94590
PHONE: (707) 563-4549

APPLICANT/AGENT:
BUNTY SIDHU
1530 FLAGSHIP DRIVE
VALLEJO, CA 94592
EMAIL: BUNTY@CROWNHILLMATERIALS.COM
PHONE: (707) 704-3195

LANDSCAPE ARCHITECT:
MAISHA RUTH
STANTEC ARCHITECTURE INC.
1383 NORTH MCDOWELL BLVD. SUITE 250
PETALUMA, CA 94954
EMAIL: MAISHA.RUTH@STANTEC.COM
PHONE: (707) 658-4707

PROJECT INFORMATION

APN: 0052 - 090 - 170
ADDRESS: 1888 BROADWAY ST, VALLEJO, CA 94589
LAND USE: COMMERCIAL
WATER SUPPLY TYPE: UNKNOWN
WATER UTILITY PROVIDER: UNKNOWN

RENOVATED LANDSCAPE AREA: 1,360 S.F.
TURF AREA: 0 S.F.

LANDSCAPE DOCUMENTATION

	SHT.#	DESCRIPTION
☑	L1	PROJECT INFORMATION
☑	L2	WATER EFFICIENT WORKSHEET
☑	PENDING	SOIL MANAGEMENT REPORT
☑	L3	LANDSCAPE PLANTING PLAN
☑	L4	LANDSCAPE IRRIGATION PLAN
☑	N/A	GRADING AND DRAINAGE PLAN

INDEX OF DRAWINGS

PERMIT DRAWINGS

SHT.#	TITLE
L1	LANDSCAPE COVER SHEET
L2	LANDSCAPE NOTES & CALCULATIONS
L3	LANDSCAPE PLANTING PLAN
L4	LANDSCAPE IRRIGATION PLAN
L5	LANDSCAPE DETAILS - PLANTING
L6	LANDSCAPE DETAILS - IRRIGATION
L7	LANDSCAPE SPECIFICATIONS

CONSTRUCTION NOTES

GENERAL:

1. CONTRACTOR IS TO CONDUCT A FIELD REVIEW AND IS TO BE FAMILIAR WITH ALL EXISTING AND PROPOSED UTILITIES AND SUBSURFACE FEATURES PRIOR TO START OF WORK. SEE ARCHITECTURAL SITE PLANS AND CIVIL PLANS.
2. ALL MATERIALS AND EQUIPMENT SHALL BE PROVIDED AND INSTALLED AS SHOWN ON THE PLANS, IN THE DETAILS AND AS DESCRIBED IN THE SPECIFICATIONS, EXCEPT AS NOTED OTHERWISE.
3. ALL UTILITIES AND EXISTING IRRIGATION ARE TO BE PRESERVED AND PROTECTED IN PLACE. EXISTING REMOTE CONTROL VALVES SERVICING ADJACENT AREAS MUST REMAIN IN OPERATION DURING THE COURSE OF THE PROJECT. SHOULD THERE BE ANY DISRUPTION IN WATER SERVICE AS RESULT OF THIS WORK AND PLANTS IN ADJACENT AREAS DIE, THE CONTRACTOR WILL BE RESPONSIBLE TO REPLACE PLANTS IN LIKE KIND. THEREFORE THE CONTRACTOR MAY BE REQUIRED TO HOOK UP TEMPORARY IRRIGATION OR HAND WATER FOR THE DURATION UNTIL PERMANENT REPAIRS CAN BE MADE. THE CONTRACTOR WILL BE RESPONSIBLE TO REPLACE IN LIKE KIND.
4. THE CONTRACTOR IS REQUIRED TO PROVIDE THE QUANTITY OF MATERIALS SHOWN ON THE PLAN DRAWING. QUANTITIES IN THE LEGEND ARE MERELY A GUIDE. QUANTITIES SHOWN ON THE DRAWING TAKE PRECEDENCE OVER QUANTITIES LISTED IN THE LEGENDS.
5. FINAL CERTIFICATION OF THE LANDSCAPE INSTALLATION AND IRRIGATION AUDIT IS REQUIRED BY BOTH THE CITY AND LANDSCAPE ARCHITECT, CONTRACTOR TO CONFIRM CERTIFICATION REQUIREMENTS AND TO CONTACT STANTEC 48 HOURS PRIOR TO COMPLETION OF INSTALLATION WORK TO ARRANGE FOR THE REQUIRED SITE REVIEW AS PART OF THIS CERTIFICATION.
6. CONSTRUCTION WASTE TO BE RECYCLED PER LOCAL CODES AND REQUIREMENTS
7. OBTAIN ALL MATERIALS LOCALLY (WITHIN 50 MILES) AS POSSIBLE.
8. REFER TO ARCHITECTURAL AND CIVIL PLANS FOR DESCRIPTIONS OF ELEMENTS NOT IDENTIFIED ON THIS PLAN.

PLANTING:

9. ALL (E) PLANTED AREAS SHALL HAVE A 2" LAYER OF ORGANIC COMPOST LIGHTLY ROTOTILLED TO WITHIN 2' OF EXISTING PLANTS TO A DEPTH OF 2", AND UNPLANTED AREAS TO HAVE A 2" LAYER OF ORGANIC COMPOST ROTOTILLED TO A DEPTH OF 4". COVER ALL SOILS WITH RECYCLED PAPER AS A BIODEGRADABLE WEED SUPPRESSANT AND TOPDRESSED WITH A 3" (MINIMUM) DEEP LAYER OF 3/4" MINUS WOOD CHIP MULCH. MULCH COLOR: BLACK OR DARK BROWN.
10. OBSERVE THE FOLLOWING MINIMUM SETBACK DISTANCES FOR TREE PLANTING :

BETWEEN STREET TREES	= 30 FT.
DRIVEWAY CUTS AND FIRE HYDRANTS	= 7 FT.
UTILITY BOXES, MANHOLE AND OTHER UTILITY VAULTS, TELEPHONE AND OTHER UTILITY POLES, GAS AND WATER METER, AND MAINS	= 6 FT.
STREET LIGHTS	= 12 FT.

11. ALL SURFACE AND SUB-SURFACE SWALES, DRAINAGE STRUCTURES AND PATTERNS SHALL BE MAINTAINED.
12. A LICENSED LANDSCAPE MAINTENANCE CONTRACTOR WILL BE RETAINED TO PERFORM LONGTERM ROUTINE MAINTENANCE DUTIES.
13. LOCATIONS AND QUANTITIES OF EXISTING LANDSCAPE MATERIALS ARE APPROXIMATE. CONTRACTOR IS TO FIELD CONFIRM THOSE PLANT MATERIALS TO BE REMOVED OR RETAINED PRIOR TO THE START OF WORK.
14. NOT USED.
15. EXISTING LANDSCAPING TO REMAIN TO BE PROTECTED FROM DAMAGE DURING CONSTRUCTION. GRADING AND TRENCHING WITHIN DRIPLINES OF EXISTING PLANTS SHALL BE LIMITED AND SHALL BE DONE MANUALLY.
16. NOT USED.
17. EXISTING LANDSCAPE AREAS TO REMAIN WITHIN WORK LIMIT LINE: SURFACE IN THESE AREAS TO BE HAND OR MECHANICALLY CLEANED FREE OF WEEDS, LITTER AND DEBRIS. REMOVE DEAD, DAMAGED, OR MISSING PLANTS AS SHOWN ON L3. TOP-DRESS PER NOTE 9. FERTILIZE WITH A BALANCED, COMPLETE, GRANULAR ORGANIC FERTILIZER EQUAL TO (10-10-10 + MICRONUTRIENTS) TIME RELEASE PLANT FOOD PER SOILS REPORT.
18. PER CITY OF VALLEJO CODES - SOIL MANAGEMENT REPORT REQUIRED:
PLANTER SOIL SHALL BE AMENDED PER THE SOIL CONDITIONING NOTE BELOW FOR BIDDING AND ADJUSTED PER THE RESULTS AND RECOMMENDATION OF THE REQUIRED POST GRADING LABORATORY SOIL ANALYSIS:
   A. CONTRACTOR SHALL OBTAIN A SOIL TEST IN ORDER TO CONFIRM SOIL CONDITIONING AND AMENDMENTS. SOIL SAMPLES SHALL BE COLLECTED PRIOR TO THE INSTALLATION OF LANDSCAPE MATERIALS. CONTRACTOR SHALL CHOOSE 4 PLACES ON SITE, DIG 12" DOWN, MIX 4 SAMPLES IN A BUCKET, AND SEND APPRAISAL. CONTRACTOR SHALL FOLLOW LABS RECOMMENDED AMENDMENT AND FERTILIZE SCHEDULE.
   B. TESTING TO INCLUDE TEXTURE, pH, INFILTRATION RATE, SOLUBLE SALTS, SODIUM, % ORGANIC MATTER AND RECOMMENDATIONS. FORWARD ALL ANALYSIS TO THE STANTEC LANDSCAPE DEPARTMENT. CONTRACTOR SHALL INSTALL SOIL AMENDMENTS , AS RECOMMENDED OR BETTER, TO CORRECT FOR PROBLEMS NOTED BY THE SOIL REPORT.
   C. CONTRACTOR TO PROVIDE LABELS AND P.O.'S OF PRODUCTS USED TO OWNER'S REPRESENTATIVE.
19. SOIL CONDITIONING (MINIMUM FOR BIDDING - SEE SOILS TESTING CONSTRUCTION NOTE)
   A. CONTRACTOR TO BID SOIL AMENDMENTS AND FERTILIZERS AS INDICATED BELOW AND ROTOTILL, MAKING REPEATED PASSES WITH THE CULTIVATOR TO THE DEPTH SPECIFIED UNTIL THE AMENDMENTS HAVE BEEN THOROUGHLY MIXED.
      ROTOTILL THE FOLLOWING INTO THE TOP 4 INCHES OF SOIL AT THE SPECIFIED RATES PER 1,000 SQUARE FEET OF AREA:
      6 CUBIC YARDS ORGANIC COMPOST
      20 LBS. OF ORGANIC FERTILIZER EQUAL TO 16-8-8 CONTROLLED RELEASE FERTILIZER.
      SHOULD SOILS TEST RESULTS REQUIRE ADDITIONAL CONDITIONING AND FERTILIZERS, THE CONTRACTOR MAY BE ENTITLED TO ADDITIONAL MONIES ABOVE BID. CONTRACTOR TO SUBMIT REQUEST FOR ADDITIONAL MONIES TO THE LANDSCAPE ARCHITECT AND OWNER AND TO INCLUDE BACKUP DOCUMENTATION.
   B. BACKFILLING:
      1. BACKFILL THE SIDES ONLY OF PLANTING PITS WITH THE SPECIAL BACKFILL MIX HEREIN SPECIFIED OR PER SOILS TEST RESULTS.
      2. WATER-SETTLE BACKFILL THOROUGHLY OR COMPACT BY OTHER APPROVED METHOD PRIOR TO PLANTING SO PLANTS DO NOT SETTLE.
      3. SPECIAL BACKFILL MIX FOR PLANTING HOLES:
         A. MATERIALS: 90 PERCENT
            I. NATIVE SOIL. 10 PERCENT AMENDED
            II. NATIVE SOIL
         B. MIXING:
            I. PREPARE THE MIX IN STOCKPILES ON SITE; DO NOT MIX AT EACH INDIVIDUAL PLANTING HOLE.
            II. MIX THOROUGHLY, LEAVING NO LAYERS OF SOIL AMENDMENTS OR CLODS
         C. FERTILIZER TABLETS: PLACE TABLETS IN THE BACKFILLED PLANTING HOLES PER THE MANUFACTURER'S PRINTED RECOMMENDATIONS AT THE FOLLOWING RATE:
            1 GALLON - 1 TABLET 15 GALLON - 4 TABLETS 36" BOX - 8 TABLETS
            5 GALLON - 2 TABLETS 24" BOX - 6 TABLETS
20. NOT USED.
21. NOT USED.

IRRIGATION:

22. ELEMENTS OF THE GENERAL CONTRACT CONDITIONS ARE APPLICABLE TO THIS WORK. ANY DISCREPANCIES OR INCONSISTENCIES NOTED SHALL BE IMMEDIATELY BROUGHT TO THE ATTENTION OF THE PROJECT ENGINEER FOR RESOLUTION. IF A DISCREPANCY EXISTS BETWEEN WATER PRESSURE TESTED ON-SITE AND NOTED ON PLAN, CONTRACTOR SHALL IMMEDIATELY NOTIFY PROJECT ENGINEER.
23. ALL IRRIGATION EQUIPMENT TO BE PLACED IN PLANTERS AND TO BE ROUTED AROUND LIGHTS AND OTHER OBSTRUCTIONS. LOCATE CONTROL VALVES IN EASILY ACCESSIBLE AREAS OF SHRUB BEDS.
24. NOT USED
25. CARE TO BE TAKEN TO AVOID DAMAGE TO EXISTING PLANTS IN BOTH DEVELOPED AND UNDEVELOPED AREAS AND THEIR ROOTS. NO MECHANICAL TRENCHING BENEATH DRIPLINES. DO NOT CUT ROOTS LARGER THAN 1" IN DIAMETER WITHOUT ARBORIST SUPERVISION.
26. NOT USED
27. POINT SOURCE COVERAGE IS REQUIRED. CONTRACTOR TO ADD ADDITIONAL DRIP EMITTERS AND PIPING AS NEEDED AT NO EXTRA CHARGE. MIN 2 EMITTERS PER PLANT REQUIRED.
28. P.R.V. TO BE INSTALLED IF PRESSURE EXCEEDS 80 P.S.I.
29. EXACT LOCATION OF CONTROLLER TO BE APPROVED BY OWNER. POWER SUPPLY FOR CONTROLLER PROVIDED ON SITE BY OWNER.
30. IRRIGATION AUDIT IS REQUIRED PER CITY FOR CERTIFICATE OF OCCUPANCY. SEE NOTE 5, SHEET L1.
31. ADJUST ALL SPRINKLERS, EMITTERS AND BUBBLERS TO AVOID OVER SPRAY ON BUILDING WALL OR MONUMENT SIGN OR PROVIDING EXCESS WATER.
32. NOT USED
33. CONTRACTOR TO FIELD CONFIRM IF GRADE CHANGES REQUIRE INSTALLATION OF AN INLINE CHECK VALVE PRIOR TO POLY PIPE RUN, AND TO INSTALL AS NEEDED. NO LOW EMITTER DRAINAGE OR PIPE DRAINAGE ALLOWED, TYP.
34. INCLUDED IN THIS WORK IS THE TESTING OF THE EXISTING BACKFLOW PREVENTION DEVICE TO VERIFY PROPER PERFORMANCE. IF BACKFLOW DOES NOT PASS TEST OR MEET CURRENT REQUIREMENTS, A NEW LEAD-FREE RPBP OR OTHER CODE COMPLIANT DEVICE IS TO BE INSTALLED PER LOCAL CODES, LEGEND AND DETAILS. CONTRACTOR IS ENTITLED TO AN ADDITIONAL COST TO REPLACE/INSTALL NEW DEVICE AND ALL APPURTENANCES.
35. NOT USED
36. FOR POCs, LOCATE EXISTING IRRIGATION MAINLINE, PRESSURE TEST AND TIE IN WITH NEW SCH 40 P.V.C. MAIN.

SOILS TESTING REQUIREMENTS:
CONTRACTOR SHALL OBTAIN A SOIL TEST IN ORDER TO CONFIRM SOIL CONDITIONING AND AMENDMENTS. SOIL SAMPLES SHALL BE COLLECTED PRIOR TO THE INSTALLATION OF LANDSCAPE MATERIALS. CONTRACTOR SHALL OBTAIN SAMPLE PER NOTE 18 ABOVE. CONTRACTOR SHALL FOLLOW LABS RECOMMENDED AMENDMENT AND FERTILIZE SCHEDULE AND SEND TEST RESULTS TO CITY AND LANDSCAPE ARCHITECT.

IT IS THE CONTRACTOR'S RESPONSIBILITY TO OBTAIN THE MOST CURRENT AND APPROVED LANDSCAPE PLANS PRIOR TO THE START OF WORK.

VICINITY MAP

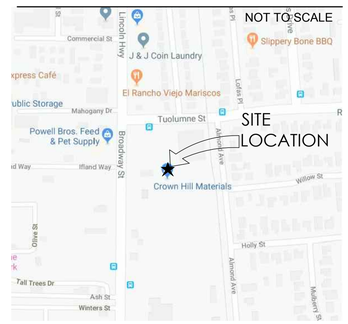

NORTH

PLANT STOCK REQUIREMENTS

CONTRACTOR TO PROVIDE PLANT MATERIALS THAT MEET THE AAN AS FOLLOWS:

1. NO "S". GIRDLING, KINKED OR CIRCLING ROOTS.
2. NO TREES THAT HAVE BEEN TOPPED.
3. NO WOUNDS IN TRUNKS BARK OR LIMBS.
4. BE INSECT AND PEST FREE.
5. NO TREES WITH NURSERY STAKES THROUGH THE ROOT BALL.
6. TREES TO BE UPRIGHT AND PLUMB.
7. ALL GRAFTS TO BE HEALTHY.
8. ALL PLANTS TO SHOWN HEALTHY VIGOR.
9. SUBSTITUTIONS MUST MEET THE DESIGN CRITERIA FOR HEIGHT AND WIDTH ALONG WITH LEAF AND BLOOM COLOR.

DIGALERT
800-227-2600
Call 2 Full Working Days In Advance

Stantec
Architecture Inc.
1383 North McDowell Blvd. Suite 250
Petaluma, CA 94954
TEL 707.765.1660
www.stantec.com

The Contractor shall verify and be responsible for all dimensions. DO NOT scale the drawing - any errors or omissions shall be reported to Stantec without delay. The Copyrights to all designs and drawings are the property of Stantec. Reproduction or use for any purpose other than that authorized by Stantec is forbidden.

Revision		By	Appd.	YY.MM.DD
1	REVISED PER CITY	GAM	MFR	12-16-19

Issued

Client/Project
CROWN HILL MATERIALS LLC
LANDSCAPE IMPROVEMENTS
VALLEJO, CALIFORNIA 94589
Title
LANDSCAPE COVER SHEET

Permit-Seal
REGISTERED LANDSCAPE ARCHITECT MAISHA RUTH STATE OF CALIFORNIA
SIGNATURE
6 / 30 / 21
RENEWAL DATE
12-16-19
DATE

Project Number: 2042562400
File Name:

Dwn. Chkd. Dsgn. YY.MM.DD
Drawing No. L1
Revision Sheet
- - of -

\\US0352-PPESC01\workgroup\2042\active\2042562400\landscape\design\drawing\2042562400 L1 Cover.dwg
2019/12/16 3:47 PM By: MBaldock, Gdyan

ORIGINAL SHEET - ARCH D

City of VALLEJO California

Central Permit Center · 555 Santa Clara Street · Vallejo · CA · 94590

Business License	Building	Fire Prevention	Planning	Public Works
707.648.4310	707.648.4374	707.648.4565	707.648.4326	707.651.7151

Attachment 2 – Water Efficient Landscape Worksheet

Reference Evapotranspiration (ETo) 40.3

Hydrozone # /Planting Description[a]	Plant Factor (PF)	Irrigation Method[b]	Irrigation Efficiency (IE)[c]	ETAF (PF/IE)	Landscape Area (sq, ft,)	ETAF x Area	Estimated Total Water Use (ETWU)[e]
Regular Landscape Areas							
Very-low	**0 – .10**						
Low (SHRUBS & TREES)	**.10 - .30**	DRIP	0.81	0.243	1555	377	9419
Moderate	**.40 - .60**						
High	**.70 – 1.0**						
				Totals	(A)	(B)	9419
Special Landscape Areas							
				1			
				1			
				1			
				Totals	(C)	(D)	0
						ETWU Total	9419
						Maximum Allowed Water Allowance (MAWA)[e]	17483

[a]Hydrozone #/Planting Description
E.g
1.) front lawn
2.) low water use plantings
3.) medium water use planting

[b]Irrigation Method
overhead spray
or drip

[c]Irrigation Efficiency
0.75 for spray head
0.81 for drip

***[d]ETWU* (Annual Gallons Required) =**
40.3 x 0.62 x ETAF x Area
where 0.62 is a conversion factor that converts acre-inches per acre per year to gallons per square foot per year.

[e]MAWA (Annual Gallons Allowed) = *(40.3) (0.62) [(ETAF x LA) + ((1-ETAF) x SLA)]*
where 0.62 is a conversion factor that converts acre-inches per acre per year to gallons per square foot per year, LA is the total landscape area in square feet, SLA is the total special landscape area in square feet, and ETAF is .55 for residential areas and 0.45 for non-residential areas.

ETAF Calculations

Regular Landscape Areas

Total ETAF x Area	(B)
Total Area	(A)
Average ETAF	**B ÷ A**

All Landscape Areas

Total ETAF x Area	(B+D)
Total Area	(A+C)
Sitewide ETAF	**(B+D) ÷ (A+C)**

Average ETAF for Regular Landscape Areas must be 0.55 or below for residential areas, and 0.45 or below for non-residential areas.

ESTABLISHMENT IRRIGATION SCHEDULE

Crown Hill Materials
1888 Broadway Ave, Vallejo, California
Irrigation Schedule and Calculations
Data

Reference Evapotranspiration (Eto) Amounts:

Jan	Feb	Mar	Apr	May	June	July	Aug	Sept	Oct	Nov	Dec
1.30	1.40	2.70	3.80	4.90	5.00	6.40	5.50	4.40	2.90	1.20	0.70

Total Yearly Eto: 40.30 inches

Irrigation System Information:

Station	Plant Facto	Irr Type	sq ft area	ppt	Efficiency	GPM	Run Days	Cycle/Day	Notes
1	0.3	Bubblers	64	0.60	81%	2.00	7	1	
2	0.3	Drip	1,555	0.60	81%	4.00	7	1	
3	0.0	Drip	0	0.60	81%	0.00	0	0	
4	0.0	Drip	0	0.60	81%	0.00	0	0	

Total Area: 1,619 sq. ft.

ESTABLISHED IRRIGATION SCHEDULE

Crown Hill Materials
1888 Broadway Ave, Vallejo, California
Irrigation Schedule and Calculations
Data

Reference Evapotranspiration (Eto) Amounts:

Jan	Feb	Mar	Apr	May	June	July	Aug	Sept	Oct	Nov	Dec
1.30	1.40	2.70	3.80	4.90	5.00	6.40	5.50	4.40	2.90	1.20	0.70

Total Yearly Eto: 40.30 inches

Irrigation System Information:

Station	Plant Facto	Irr Type	sq ft area	ppt	Efficiency	GPM	Run Days	Cycle/Day	Notes
1	0.3	Bubblers	64	0.60	81%	2.00	4	1	
2	0.3	Drip	1,555	0.60	81%	4.00	5	1	
3	0.0	Drip	0	0.60	81%	0.00	0	0	
4	0.0	Drip	0	0.60	81%	0.00	0	0	

Total Area: 1,619 sq. ft.

1

City of VALLEJO California

Central Permit Center · 555 Santa Clara Street · Vallejo · CA · 94590

Business License	Building	Fire Prevention	Planning	Public Works
707.648.4310	707.648.4374	707.648.4565	707.648.4326	707.651.7151

Attachment 5 – Certificate of Completion and Certification of Installation According to the Landscape Documentation Package

CERTIFICATE OF COMPLETION
Project Information

Date _____
Project Number (LRxx-xxxx) _____
Project Street Address _____
_____ Parcel or Lot Number(s) _____
_____

Applicant Name _____
Phone Number _____
Email Address _____
Street Address, City and Zip _____
_____

Property Owner Name _____
Phone Number _____
Email Address _____
Street Address, City and Zip _____
_____

Property Owner:

"I/we certify that I/we have received copies of all the documents within the Landscape Documentation Package and the Certificate of the Completion and that it is our responsibility to see that the project is maintained in accordance with the Landscape and Irrigation Maintenance Schedule."

Property Owner _____ Date _____

CERTIFICATION OF INSTALLATION ACCORDING TO THE LANDSCAPE DOCUMENTATION PACKAGE

"I/we certify that based upon periodic site observations, the work has been completed in accordance with the ordinance and that the landscape planting and irrigation installation conform with the criteria and specifications of the approved Landscape Documentation Package."

Date _____
Project Number (LRxx-xxxx) _____
Name _____
Title _____
Phone Number _____
Email Address _____
License No. or Certification No. _____
Company. _____
Street Address, City and Zip _____
License No. or Certification No. _____
Signature*. _____

*Signer of the landscape design plan, signer of the irrigation plan, or a licensed landscape contractor.

PART 3. IRRIGATION SCHEDULING

Attach parameters for setting the irrigation schedule on controller per VMC Section 16.71.050.

PART 4. SCHEDULE OF LANDSCAPE AND IRRIGATION MAINTENANCE

Attach schedule of Landscape and Irrigation Maintenance per VMC Section 16.71.051.

PART 5. LANDSCAPE IRRIGATION AUDIT REPORT (Guidelines, page 14)

Attach Landscape Irrigation Audit Report per VMC Section 16.71.052.

PART 6. SOIL MANAGEMENT REPORT

Attach soil analysis report, if not previously submitted with the Landscape Documentation, per VMC Section 16.71.045.

IRRIGATION SYSTEM REQUIREMENT

IRRIGATION SYSTEM DESIGN 4 G.P.M. AT 30 P.S.I. AT THE EMITTER/HEAD/BUBBLER (MIN).

1

POINT OF CONNECTION REQUIREMENT

PRIOR TO COMMENCING WORK, CONTRACTOR SHALL VERIFY IN WRITING THAT THE MINIMUM STATIC PRESSURE AND FLOW IS AVAILABLE AT THE P.O.C. AS SHOWN ABOVE IN SYSTEM REQUIREMENTS. ANY DISCREPANCY BETWEEN THE SYSTEM REQUIREMENTS AND ACTUAL CONDITIONS SHALL BE BROUGHT TO THE IMMEDIATE ATTENTION OF THE OWNER'S REPRESENTATIVE AND THE PROJECT LANDSCAPE ARCHITECT.

VALVE SCHEDULE

VALVE NO.	VALVE SIZE	VALVE FLOW (GPM)	CIRCUIT TYPE	HEAD TYPE	PRECIP RATE (IN/HR) △ □	RECOMM PRESS. (PSI)	VALVE MODEL	S.F.	HYDROZONE
1	.75"	2	TREE BUBBLERS	HUNTER PROS-04-PRS30-CV WITH HUNTER PCN-25 BUBBLER (2) BUBBLERS PER TREE	.6	30	700	64	LOW WATER USE
2	.75"	4	SHRUBS	DRIP	.6	15	700	1555	LOW WATER USE

1

WATER AUDIT SCHEDULE

1. AN ANNUAL WATER AUDIT SHALL BE PERFORMED.
2. AUDIT TO BE PERFORMED BY A LICENSED AUDITOR. AUDIT TO BE SUBMITTED TO THE CITY OF VALLEJO PUBLIC WORKS AND WATER DEPARTMENTS.
3. AUDIT TO MINIMALLY CONSIST OF THE FOLLOWING:
   - A. SPRINKLERS TO BE CHECKED FOR WORN OR NON-WORKING PARTS. NOZZLES AND CHECK VALVES TO BE INCLUDED.
   - B. LEAKS TO BE IDENTIFIED.
   - C. SOIL TO BE PROBED FOR MOISTURE PENETRATION.
   - D. PLANT MATERIALS TO BE GENERALLY ASSESSED.
   - E. WATER USE RECORD TO BE REVIEWED.
   - F. CONTROLLER OPERATION TO BE CONFIRMED.
   - G. AUTOMATIC RAIN SHUT-OFF OPERATION TO BE CONFIRMED.
   - H. PRECIPITATION RATE AND COVERAGE UNIFORMITY TEST TO BE DONE.
   - I. RECOMMENDATIONS FOR REPAIR AND CORRECTION TO BE MADE.
4. OWNER TO SUBMIT PROOF OF REPAIRS AND CORRECTIONS MADE.

Stantec
Architecture Inc.
1383 North McDowell Blvd. Suite 250
Petaluma, CA 94954
TEL 707.765.1660
www.stantec.com

The Contractor shall verify and be responsible for all dimensions. DO NOT scale the drawing - any errors or omissions shall be reported to Stantec, without delay. The Copyrights to all designs and drawings are the property of Stantec. Reproduction or use for any purpose other than that authorized by Stantec is forbidden.

Revision	By	Appd.	YY.MM.DD
1 REVISED PER CITY	GAM	MFR	12-16-19

Issued

Client/Project
CROWN HILL MATERIALS LLC
LANDSCAPE IMPROVEMENTS
VALLEJO, CALIFORNIA 94589
Title
LANDSCAPE NOTES AND CALCULATIONS

Permit-Seal
REGISTERED LANDSCAPE ARCHITECT
TANYA RUTH #2234
SIGNATURE
6 / 30 / 21
RENEWAL DATE
12-16-19
DATE
STATE OF CALIFORNIA

Project Number: 2042562400
File Name:

Dwn. Chkd. Dsgn. YY.MM.DD
Drawing No. L2
Revision Sheet
- - of -

\\US0352-PPESD1\workgroup\2042\active\2042562400\landscape\design\drawing\2042562400 L2_Notes And Calcs.dwg
2019/12/16 3:47 PM By: Matdock, Gavyn

ORIGINAL SHEET – ARCH D

ACCEPTABLE PLANT SIZES, VARIETIES AND CONDITIONS AT TIME OF PLANTING:

SIZES HEIGHT X SPREAD CALIPER

SHRUBS:
1 GALLON 18" X 12" ---
5 GALLON 36" X 30" ---
15 GALLON 48" OR 75% OF MATURE HEIGHT AS LISTED IN PLANT LEGEND

TREES:
15 GAL 7-8' X 2'-3" .75"
24" BOX 9-10' X 4'-5' 1.75"
36" BOX 12-14'X 6'-7' 2.75"
48" BOX 16-18'X 8-9' 3.25"

PLANTS SHALL BE HEALTHY WITHOUT PESTS OR DISEASE AND SHALL NOT BE OVERGROWN; SHOW KINKED OR CIRCLING ROOTS; HAVE DAMAGED OR TWISTED TRUNKS; SHOW A PRESENCE OF HEAVILY MATTED OR WOODY PERIPHERAL ROOTS; OR BE SO RECENTLY CANNED THAT THE ROOT SYSTEM IS NOT THOROUGHLY DEVELOPED THROUGHOUT THE CAN.

TREES USED IN PLANTER FINGERS OF PARKING LOTS OR AS STREET SHADE TREES SHALL HAVE A HIGH BRANCHING BY GROWTH OR PRUNING TO A 4' CLEAR HEIGHT.

THE CONTRACTOR IS TO BE CAREFUL IN ORDERING PLANTS WHICH ARE AVAILABLE IN BOTH GROUND COVER, SHRUB OR STANDARD FORMS AND IS TO PLACE THE PLANT ORDER PER THE LEGEND GROUPING DESIGNATION; HEIGHT FOR THE MATURE PLANT AND OTHER LEGEND NOTES OR VARIETY NAME.

CONSTRUCTION NOTES

1. REMOVE ALL DEBRIS INCLUDING (E) WEED BARRIER FABRIC, LITTER, GRAVEL, ETC - WITHIN WORK AREA.
2. REMOVE WEEDS IN WORK AREA BY HAND OR MECHANICALLY.
3. (E) MAILBOX ON POST TO BE RELOCATED OUTSIDE OF (N) DRIVEWAY EXPANSION. LOCATION AND MOUNTING HEIGHT PER USPS REGULATIONS.

CITY OF VALLEJO NOTES

1. AT THE TIME OF FINAL INSPECTION, THE PERMIT APPLICANT MUST PROVIDE THE OWNER OF THE PROPERTY WITH A CERTIFICATION OF COMPLETION, CERTIFICATE OF INSTALLATION, IRRIGATION SCHEDULE OF LANDSCAPE AND IRRIGATION MAINTENANCE.

PROPOSED PLANTS

LAGERSTROEMIA INDICA 'MUSKOGEE', STANDARD

CALLISTEMON 'LITTLE JOHN'

CISTUS PURPUREUS

JUNCUS PATENS

DIETES IRIDIOIDES

LANTANA MONTEVIDENSIS

EXISTING CONDITIONS

PLANTING LEGEND

SYMBOL	SIZE	QTY.	MATURE HEIGHT	BOTANICAL NAME	WUCOLS* WATER RATING	COMMON NAME
TREES					* H, L, M HIGH, LOW, MODERATE	
	15 GAL.	4	20'	LAGERSTROEMIA INDICA 'MUSKOGEE', STANDARD	L	CRAPE MYRTLE
SHRUBS AND GRASSES						
		21		EXISTING SHRUBS TO REMAIN (APPROX QTY AND LOCATIONS SHOWN)		
		4		EXISTING SHRUBS TO BE REMOVED		
	5 GAL.	9	3'	CALLISTEMON 'LITTLE JOHN'	L	RED DWARF BOTTLEBRUSH
	5 GAL.	6	4'	CISTUS PURPUREUS	L	PURPLE ROCKROSE
	1 GAL.	7	3'	DIETES IRIDIOIDES	L	WHITE FORTNIGHT LILY
	1 GAL.	9	24"	LANTANA MONTEVIDENSIS	L	PURPLE TRAILING LANTANA UNDER 36" HEIGHT
	1 GAL. 24" O.C.	193 S.F.	36"	JUNCUS PATENS	L	BLUE RUSH
SITE FEATURES - TYPICAL						
		4		(E) BOULDERS TO BE RELOCATED. RELOCATE OUTSIDE (N) DRIVEWAY. FINAL BOULDER HT WITHIN VISIBILITY TRIANGLES TO BE UNDER 36" A.F.G.		
	x	-		(E) FENCE TO REMAIN - PROTECT DURING CONSTRUCTION		
		80 L.F.		ROOT BARRIER: INSTALL AT TREESPLANTED 4' OR LESS FROM CURBS, BUILDINGS, OR PAVEMENT. USE COPPER MESH 16.011 COPPER AVAILABLE FROM HOWARD WIRE CLOTH COMPANY, HAYWARD CA (510)887-8787, OR 24" LINEAR PLASTIC PANEL FROM DEEP ROOT OR EQUAL		

ON SITE LANDSCAPED AREA: 1,555 S.F.

CITY REQUIREMENTS

- [x] (4) NEW STREET TREES TO BE INSTALLED ON BROADWAY FRONTAGE.
- [x] TREES TO BE SELECTED FROM THE CITY OF VALLEJO MASTER TREE LIST.
- [x] MWELO WORKSHEET COMPLETED, SEE SHT L2.

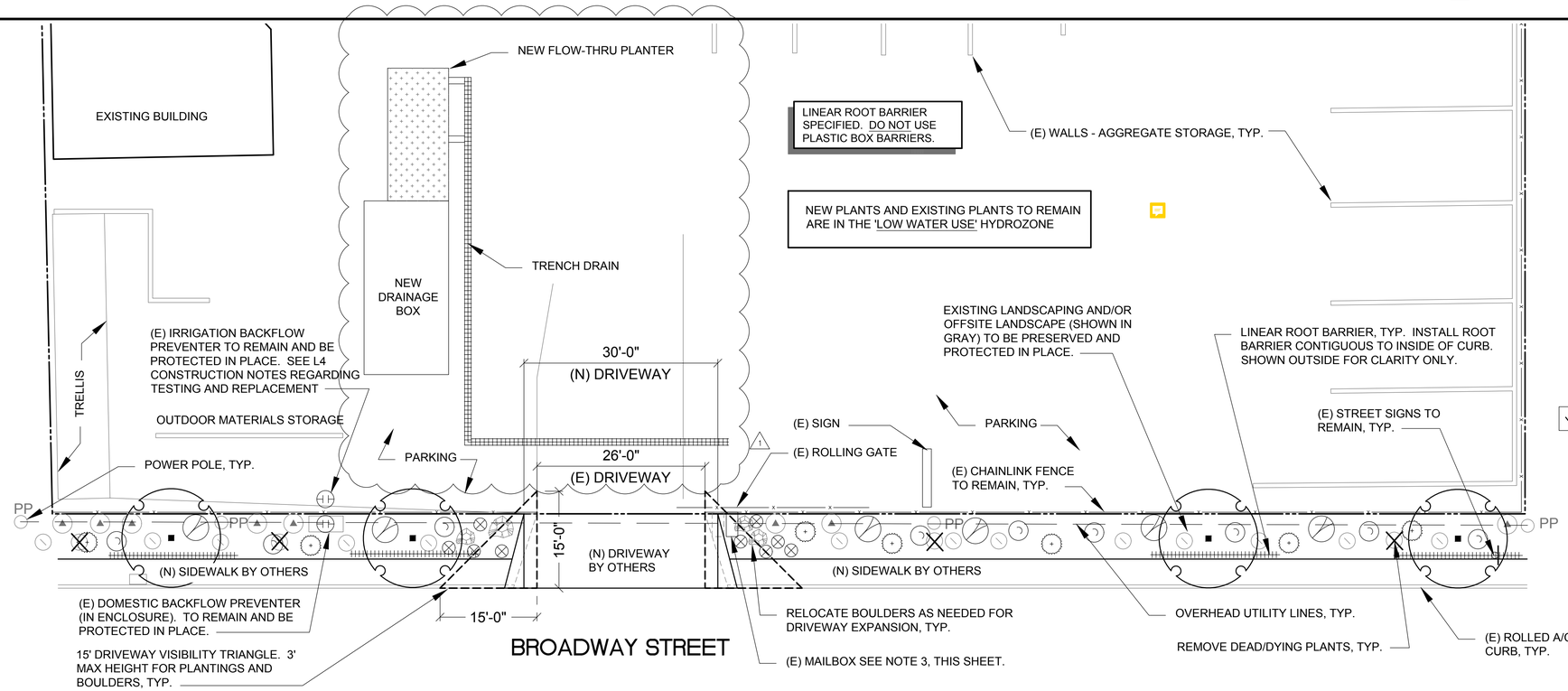

KEY MAP

SCALE: NONE

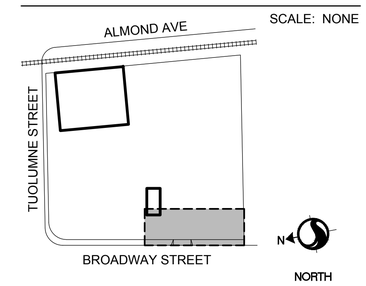

[x] I HAVE COMPLIED WITH THE CRITERIA OF THE ORDINANCE AND APPLIED THEM ACCORDINGLY FOR THE EFFICIENT USE OF WATER IN THE LANDSCAPE DESIGN PLAN.

LANDSCAPE ARCHITECT SIGNATURE — DATE 12 / 16 / 19

N NORTH — 0 5' 10' 20' SCALE: 1"=10'-0"

LANDSCAPE PLANTING PLAN

1" = 10'-0"

Stantec
Architecture Inc.
1383 North McDowell Blvd. Suite 250
Petaluma, CA 94954
TEL 707.765.1660
www.stantec.com

The Contractor shall verify and be responsible for all dimensions. DO NOT scale the drawing - any errors or omissions shall be reported to Stantec without delay. The Copyrights to all designs and drawings are the property of Stantec. Reproduction or use for any purpose other than that authorized by Stantec is forbidden.

Revision	By	Appd.	YY.MM.DD
1 REVISED PER CITY	GAM		12-16-19

Issued

Client/Project: CROWN HILL MATERIALS LLC
LANDSCAPE IMPROVEMENTS
VALLEJO, CALIFORNIA 94589
Title: LANDSCAPE PLANTING PLAN

Permit-Seal: REGISTERED LANDSCAPE ARCHITECT — NASHA RUTH #2341 — SIGNATURE — 6 / 30 / 21 RENEWAL DATE — 12-16-19 DATE — STATE OF CALIFORNIA

Project Number: 2042562400
File Name:

Dwn.	Chkd.	Dsgn.	YY.MM.DD

Drawing No. L3
Revision -
Sheet - of -

\\US0352-PPFSS01\workgroup\2042\active\2042562400\landscape\design\drawing\2042562400_L3 Planting Plan.dwg
2019/12/16 3:47 PM By: MaBaDeL Gayyn

ORIGINAL SHEET – ARCH D

CONTRUCTION NOTES

1. TESTING OF THE (E) BACKFLOW PREVENTER IS REQUIRED. CONTRACTOR TO REPLACE IF REQUIRED BY TEST RESULTS. SEE NOTE 34, SHT L1.
2. EXISTING IRRIGATION SHOWN IS TO BE VERIFIED IN FIELD BY THE CONTRACTOR. IT IS THE CONTRACTOR'S RESPONSIBILITY TO FIELD LOCATE AND DOCUMENT ALL EXISTING EQUIPMENT PRIOR TO DEMOLITION. (E) MAILBOX ON POST TO BE RELOCATED OUTSIDE OF (N) DRIVEWAY EXPANSION. LOCATION AND MOUNTING HEIGHT PER USPS REGULATIONS.
3. POWER FOR ALL IRRIGATION EQUIPMENT TO BE SUPPLIED BY OWNER.
4. CONTRACTOR TO ADJUST WATERING SCHEDULES AND EMITTERS TO PROVIDE ENOUGH WATER FOR NEW PLANTINGS AND TO NOT OVER-WATER EXISTING PLANTINGS.
5. (E) IRRIGATION SYSTEM IS CURRENTLY OPERATED MANUALLY. (N) IRRIGATION SYSTEM IS TO BE AUTOMATICALLY CONTROLLED WITH NEW CONTROLLER AND VALVES AS SHOWN ON PLAN. CONTRACTOR TO REMOVE ANY (E) MANUAL VALVES, HOSEBIBS, ETC ON EXISTING SYSTEM IN ORDER TO ALLOW (N) SYSTEM WORK TO PERFORM AUTOMATICALLY AS DESIGNED.

WATER CONSERVATION CONCEPT

A COMBINATION OF SUB-SURFACE LOW FLOW DRIP, BUBBLERS, AND/OR LOW VOLUME HUNTER MP ROTATOR SPRAYS SHALL BE INSTALLED IN ALL PLANTERS.

PLANTS ARE GROUPED INTO "HYDROZONES" AND IRRIGATED SEPARATELY FROM THOSE WITH DIFFERENT WATER REQUIREMENTS.

IRRIGATION SYSTEM SHALL BE EQUIPPED WITH A WEATHER TRACK CONTROLLER CAPABLE OF DUAL PROGRAMMING. FLOW SENSOR LEAK DETECTION AND AUTOMATIC SHUT-OFF TO BE PROVIDED AT POC.

IRRIGATION LEGEND - TYPICAL

SYMBOL	DESCRIPTION	MANUFACTURER & MODEL NUMBER	REMARKS
	4" POP-UP BUBBLER	SEE VALVE SCHEDULE	FLUSH WITH GRADE
	(E) REDUCED PRESSURE BACKFLOW PREVENTER	REPLACE WITH LEAD-FREE x" FEBCO LF825Y W/ ALL-WEATHER BLANKET IF NEEDED PER TESTING RESULTS. SEE NOTE 1, THIS SHT.	PER LOCAL CODES
P.O.C.	POINT OF CONNECTION		AFTER (E) RPBP
	BRONZE GATE VALVE LINE SIZE , LEAD-FREE	NIBCO T-113-LF SERIES	IN VALVE BOX
C	WEATHER-TRACKING AUTOMATIC CONTROLLER	IRRITROL MC-E 4	PEDESTAL MOUNT, COORDINATE LOCATION WITH OWNER. POWER BY OWNER
	WIRELESS CLIMATE SENSOR	IRRITROL CLIMATE LOGIC CL-100	FENCE/POST MOUNT WITH BRACKET
1 2	REMOTE CONTROL VALVE SEE VALVE SCHEDULE	IRRITROL 700 SERIES	IN INDIVIDUAL VALVE BOX
	FLOW SENSOR SHUT OFF & MASTER VALVE	CREATIVE SENSOR TECHNOLOGY 1" FSI-T10-001 W/ 1" HUNTER ICV. USE 3M DBR-Y600 WEATHERTIGHT CONNECTORS.	INSTALL IN VALVE BOX. INSTALL PER MFG, INCLUDING SETBACKS. POWER BY OWNER.
	1" P.V.C. SCHEDULE 40 MAINLINE		18" COVER
	P.V.C. SCHEDULE 40 SLEEVE, 2X LINE SIZE, BY GENERAL CONTRACTOR EXCEPT WHERE KEYNOTED		24" COVER W/ 6" SAND BED. EXTEND 18" BEYOND BACK OF CURB
	P.V.C. SCHEDULE 40 LATERAL, SIZE PER PLAN		12" COVERAGE
	ON GRADE RAINBIRD XFD BLANK 1/2" POLYETHYLENE BROWN PIPE (OR NDS BLACK IPS FLEX PIPE) WITH FLUSH CAP. PRESSURE COMPENSATING RAINBIRD XERIBUG XB EMITTERS WITH 1/2" FPT, SEE DETAIL SHEET L6 FOR EMITTER NUMBER, LOCATIONS AND GPH.		ON GRADE PIPE WITH 3" DP MULCH COVER
	RAINBIRD 1800 RETRO CONVERSION KIT		INSTALL AT (E) SPRINKLERS AS SHOWN ON PLANS. CAP OFF UNUSED SPRINKLERS.

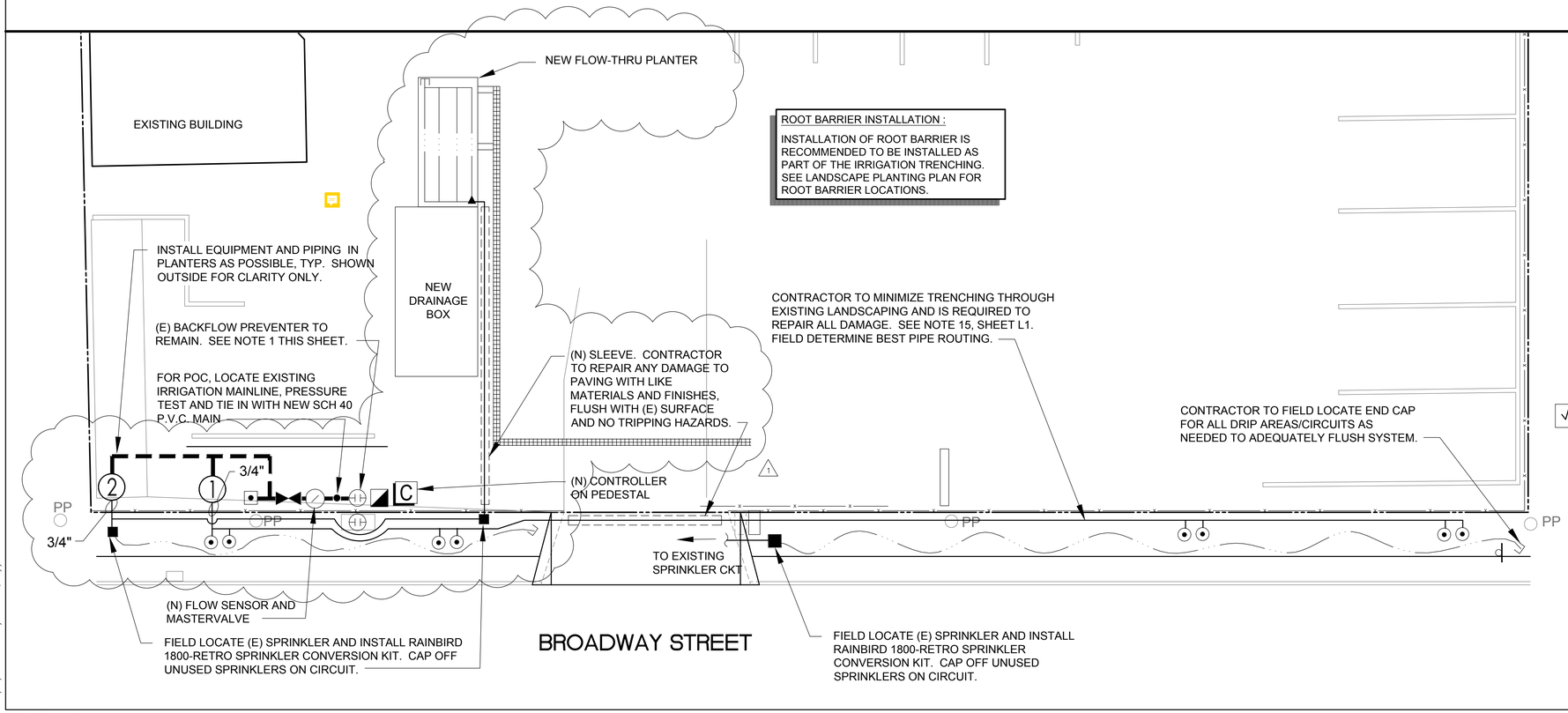

I HAVE COMPLIED WITH THE CRITERIA OF THE ORDINANCE AND APPLIED THEM ACCORDINGLY FOR THE EFFICIENT USE OF WATER IN THE IRRIGATION DESIGN PLAN.

LANDSCAPE ARCHITECT SIGNATURE — DATE 12 / 16 / 19

NORTH

0 5' 10' 20'

SCALE: 1"=10'-0"

LANDSCAPE IRRIGATION PLAN

1" = 10'-0"

Stantec
Architecture Inc.
1383 North McDowell Blvd. Suite 250
Petaluma, CA 94954
TEL 707.765.1660
www.stantec.com

The Contractor shall verify and be responsible for all dimensions. DO NOT scale the drawing - any errors or omissions shall be reported to Stantec, without delay. The Copyrights to all designs and drawings are the property of Stantec. Reproduction or use for any purpose other than that authorized by Stantec is forbidden.

Revision	By	Appd.	YY.MM.DD
1 REVISED PER CITY	GAM	MFR	12-16-19

Issued

Client/Project
CROWN HILL MATERIALS LLC
LANDSCAPE IMPROVEMENTS
VALLEJO, CALIFORNIA 94589

Title
LANDSCAPE IRRIGATION PLAN

Permit-Seal

Project Number: 2042562400
File Name:
Dwn. Chkd. Dsgn. YY.MM.DD
Drawing No. L4
Revision Sheet
- - of -

\\US1052-PPESP01\workgroup\2042\active\2042562400\landscape\design\drawing\2042562400 L4_Irrigation Plan.dwg
2019/12/16 3:47 PM By: MOSSICK, Gavyn

ORIGINAL SHEET - ARCH D

MAINTENANCE SCHEDULE

SEE LANDSCAPE SPECIFICATIONS FOR ADDITIONAL MAINTENANCE REQUIREMENTS

1.1 PLANT MATERIALS

A. MAINTENANCE OF PLANTING:

1. CONTINUOUSLY MAINTAIN ALL PLANTINGS IN AREAS INCLUDED IN THE CONTRACT FROM THE BEGINNING OF CONTRACT WORK, DURING THE PROGRESS OF WORK, AND FOR A MINIMUM OF A 90 DAY PERIOD AND A MAXIMUM OF 120 DAYS PER CONTRACT WITH OWNER/GENERAL CONTRACTOR. MAINTENANCE PERIOD BEGINS AT THE COMPLETION OF ALL WORK OR FINAL ACCEPTANCE OF ALL CONTRACT WORK BY THE OWNER'S REPRESENTATIVE.
2. TREE/SHRUB CARE:
   a. INSECTICIDES, HERBICIDES, FUNGICIDES SHALL BE THE FINEST QUALITY OBTAINABLE.
   b. CHEMICALS SHALL BE DESIGNED FOR THE PROBLEM AND APPLIED IN A PROFESSIONAL MANNER.
   c. PRUNING SHALL BE DONE BY A QUALIFIED PROFESSIONAL USING APPROVED METHODS/TECHNIQUES.
   d. PRUNE ONLY TO CORRECT MIS-SHAPING, ENCROACHMENT OR REMOVE DAMAGED/DEAD WOOD.
   e. AVOID MAJOR PRUNING DURING SUMMER MONTHS: POTENTIAL DAMAGE IS PREVALENT.
   f. REMOVE WEEDS THROUGH MANUAL METHODS ONLY.
   g. CONTROL DISEASE AND INSECT INFESTATIONS WITH APPROVED CHEMICALS.
   h. FERTILIZE TREES/SHRUBS AT 60 DAYS WITH A BALANCED ORGANIC 15-5-7 SLOW RELEASE FERTILIZER AT MANUFACTURER'S RECOMMENDED RATES.
   i. RESTAKE AND RE-TIE TREES AS NEEDED ACCORDING TO TREE GROWTH, USING ORIGINAL METHODS AND MATERIALS SPECIFIED.
   j. TRIM TREES AT SIDEWALKS AND ROADWAYS TO PROVIDE 7' VERTICAL CLEARANCE MINIMUM.
   k. TRIM TREES AND SHRUBS TO ENSURE SIGN VISIBILITY.
   l. SHRUBS AND TREES ADJACENT TO ROADWAY INTERSECTIONS TO BE TRIMMED TO PROVIDE ADEQUATE SITE DISTANCE FOR ENTERING/EXITING VEHICLES.
3. REPLACEMENTS: IMMEDIATELY REPLACE ANY PLANT MATERIALS THAT DIE OR ARE DAMAGED. REPLACEMENTS SHALL BE MADE TO THE SPECIFICATIONS AS REQUIRED FOR ORIGINAL PLANTINGS.
4. CONDITION OF PLANTINGS AT THE END OF THE MAINTENANCE PERIOD:
   a. ALL PLANT MATERIALS SHALL BE LIVE, HEALTHY, UNDAMAGED, AND FREE FROM INFESTATIONS.
   b. GROUND COVER, SHRUB AREAS, AND OTHER PLANTING AREAS SHALL BE FREE OF ALL WEEDS (BROADLEAF AND GRASS WEEDS).
   c. PLANTINGS THAT DO NOT CONFORM TO SPECIFICATIONS SHALL BE REPLACED AND BROUGHT TO A SATISFACTORY CONDITION BEFORE FINAL ACCEPTANCE OF THE WORK CAN BE MADE.
   d. GROUNDCOVERS AND ANNUAL/SHRUB BEDS TO BE EDGED AND TRIMMED.
   e. REPLENISH MULCH TO DEPTH SPECIFIED. KEEP MULCH 3" AWAY FROM ROOTCROWN.

2.1 IRRIGATION SYSTEM

1. LANDSCAPE SHALL BE MAINTAINED TO ENSURE WATER EFFICIENCY. IRRIGATION SYSTEM MAINTENANCE TO INCLUDED, BUT NOT BE LIMITED TO, CHECKING, ADJUSTING, & REPAIRING IRRIGATION EQUIPMENT & RESETTING THE AUTOMATIC CONTROLLER.
2. REPAIR OF IRRIGATION EQUIPMENT SHALL BE WITH THE ORIGINALLY SPECIFIED MATERIALS OR THEIR APPROVED EQUIVALENTS.

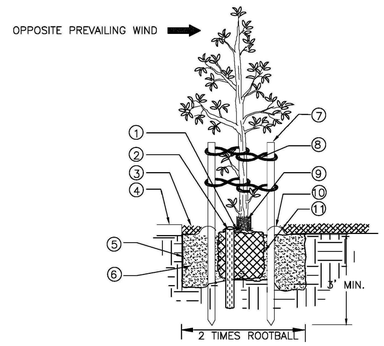

1. INSTALL TREE SO ROOTBALL IS 1" ABOVE FINISH GRADE AFTER SETTLING
2. INSTALL 2 VERTICAL DRAINS – 3" x 24" PERFORATED PIPE, FILLED WITH PEA GRAVEL. LOCATE DRAINS 16" AWAY FROM TRUNK ON EITHER SIDE 90 DEGREES FROM TREE STAKES.
3. 2" LAYER MULCH
4. HARDSCAPE
5. INSTALL LINEAR ROOT BARRIER ADJACENT TO HARDSCAPE SEE DETAIL 5–35
6. PLANTING PIT DEPTH SHALL BE 1" LESS THAN DEPTH OF ROOT BALL, BOTTOM SHALL REST ON UNDISTURBED SOIL. BACK FILL WITH AMENDED SOIL PER SOILS REPORT.
7. 2" x 8' UNTREATED LODGEPOLE STAKES POSITION UP WIND APX. 16" FROM TRUNK CUT STAKES 2" ABOVE STRAP
8. 1" WIDE RUBBER TIRE TREE TIES IN FIGURE 8 PATTERN. ATTACH WITH GALV. NAILS
9. INSTALL 'ARBOR GUARDS' AT BASE OF TRUNK
10. WATERING BASIN AT EDGE OF ROOTBALL
11. SCARIFY SIDES OF ROOTBALL TO ELIMINATE COMPACTIONS AND/OR GLAZING. SET ROOTBALL ON UNDISTURBED SOIL.

City of VALLEJO California	CITY OF VALLEJO STANDARD DETAIL	APPROVED BY:	DRAWING NO: 5–26
	15 GALLON TREE PLANTING DETAIL	DIRECTOR OF PUBLIC WORKS	SCALE: NONE
			DATE: 7/1/15

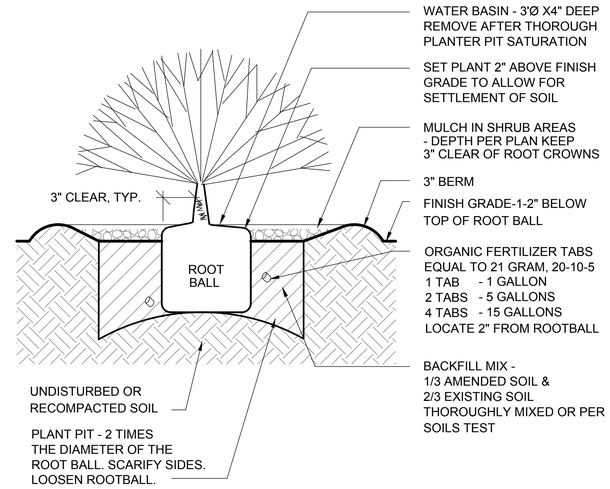

1 SHRUB PLANTING
SCALE: NONE

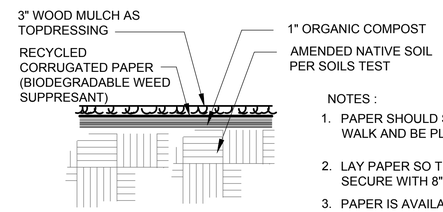

NOTES :

1. PAPER SHOULD START AT BACK OF CURB OR WALK AND BE PLACED OVER ENTIRE PLANTER
2. LAY PAPER SO THERE IS AN 8" OVERLAP. SECURE WITH 8" JUTE STAKES AS NEEDED.
3. PAPER IS AVAILABLE THROUGH AMAZON.COM, PAPER SUPPLY COMPANIES, OR FROM GLOBAL SERVICES.COM (PART NO T97B69xxx IN VARIED WIDTHS).

2 PAPER SHEET MULCHING
SCALE: NONE

Landscape Planting Maintenance Schedule

Planting Type	Annual Maintenance Procedure Winter	Spring	Summer	Fall	2 Yrs	5 Yrs	10+ Yrs
Trees and Shrubs							
Planting	x						
Fertilization		April	June	Sept.	Note 1	Note 4	Note 6
Mulch		x			Note 2	Note 5	
Pest Control		x	x		Note 3		
Plant Repair	x	x	x	x			
Pruning	x						
Groundcovers and Lawns							
Planting	x				Note 7,8	Note 9	Note 9
Fertilization		April	June	Sept.			
Mulch		x					
Pest Control		x	x				
Trimming x							
Weed Control	x	x	x	x			
Mow	As needed when Turf Reaches 3' and mow to a HGT. of 1.5' Do not Scalp						
Fertilize Lawns		x	x	x			
Vines							
Planting	x	Note 10	Note 10	Note 10	Note 10,10,10,10		
Fertilization		April	June	Sept.			
Mulch		x					
Pest Control		x	x				
Plant Repair	x	x	x	x			
Pruning	x						

Landscape Irrigation Maintenance Schedule

	Winter	Spring	Summer	Fall
System				
Flush	x			
Test Controller		April		
Seasonal Adjust	x	x	x	x
Valves Test	x	x	x	
Full Audit		x		

NOTES

Note 1: Remove tree stakes.
Note 2: Prune lower branches that will form a hazard. Do not prune leader.
Note 3: Prune back woody branches of shrubs where this will improve look of shrub. Do not shear shrubs.
Note 4: Selectively replace shrubs that have become overly woody. Prune back woody branches of shrubs where this will improve look of shrub. Do not shear shrubs.
Note 5: Remove sections of tree grate that will interfere with tree trunk.
Note 6: Replace shrubs that have become overly woody.
Note 7: In areas where establishment proves unsuccessful, amend soil and re-plant.
Note 8: Where pedestrian traffic is prohibiting groundcover establishment, replant and fence area off during establishment period.
Note 9: Replace groundcovers in areas where they have become too woody.
Note 10: Train vines to trellises and prune selectively to direct growth. Prune runners that grow along ground. Protect Young vines at base against damage from pedestrians.

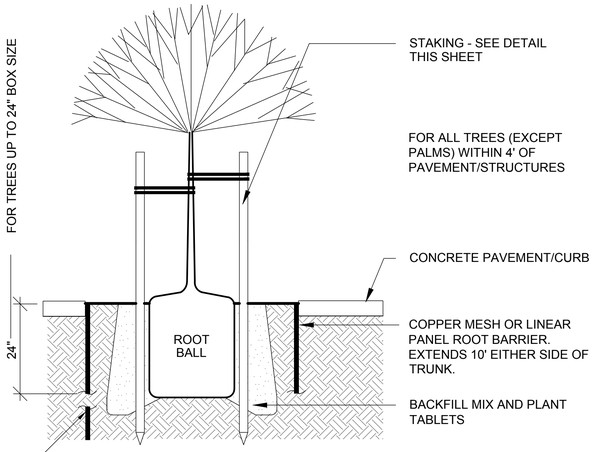

NOTE:
LAY MESH OR PANELS IN TRENCH VERTICALLY AGAINST PAVED EDGE EXTENDING HORIZONTALLY 10' EITHER SIDE OF TRUNK

3 ROOT BARRIER
SCALE: NONE

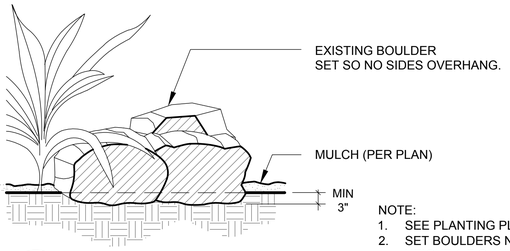

NOTE:
1. SEE PLANTING PLAN FOR LOCATIONS.
2. SET BOULDERS NO GREATER TAHN 3' HEIGHT A.F.G. WITHIN VISION TRIANGLES SHOWN ON PLAN.

4 ROCKS
SCALE: NONE

Stantec
Architecture Inc.
1383 North McDowell Blvd. Suite 250
Petaluma, CA 94954
TEL 707.765.1660
www.stantec.com

The Contractor shall verify and be responsible for all dimensions. DO NOT scale the drawing - any errors or omissions shall be reported to Stantec without delay. The copyrights to all designs and drawings are the property of Stantec. Reproduction or use for any purpose other than that authorized by Stantec is forbidden.

Revision	By	Appd.	YY.MM.DD
1 REVISED PER CITY	GAM	MFR	12-16-19

Issued

Client/Project
CROWN HILL MATERIALS LLC
LANDSCAPE IMPROVEMENTS
VALLEJO, CALIFORNIA 94589

Title
LANDSCAPE DETAILS - PLANTING

Permit-Seal
REGISTERED LANDSCAPE ARCHITECT
MARSHA RUTH
SIGNATURE
6 / 30 / 21
RENEWAL DATE
12-16-19
DATE
STATE OF CALIFORNIA

Project Number: 2042562400
File Name:

Dwn. Chkd. Dsgn. YY.MM.DD
Drawing No. L5
Revision Sheet
- - of -

\\US0352-PPESC01\workgroup\2042\active\2042562400\landscape\design\drawing\2042562400 L5_Planting Details.dwg
2019/12/16 3:47 PM By: MBaldock, Odysin

ORIGINAL SHEET – ARCH D

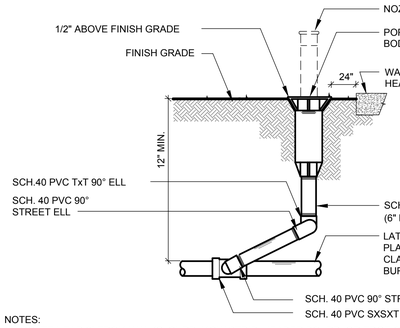

NOTES:
1. LOCATE HEAD 2" FROM WALKS, CURB, MOW STRIP, HEADER BOARD, OR EDGE OF LAWN.
2. LOCATE STREAM SPRAY/BUBBLERS 6" FROM ALL STRUCTURES, AND SPRAY HEADS 12" FROM ALL STRUCTURES.
3. USE TEFLON TAPE ON ALL MALE THREADS.

9 4" POP-UP BUBBLER
SCALE: NONE

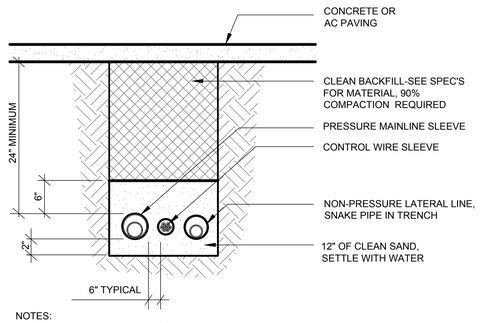

NOTES:
1. ALL SLEEVES TO BE SCH. 40 PVC.
2. EXTEND ALL SLEEVES 18" BEYOND EDGE OF PAVING AND SEAL WITH DUCT TAPE AT BOTH ENDS, PRIOR TO BACKFILLING.
3. ALL SLEEVES TO BE TWICE DIAMETER OF PRESSURE SUPPLY LINE OR LATERAL LINE.
4. ALL WIRE CONNECTIONS SHALL BE MADE WITH EPOXY-FILLED, WATER-PROOF CONNECTORS. SPLICES TO BE IN VALVE BOXES ONLY. NO IN-LINE SPLICES.

6 PIPE SLEEVING (BELOW PAVING)
SCALE: NONE

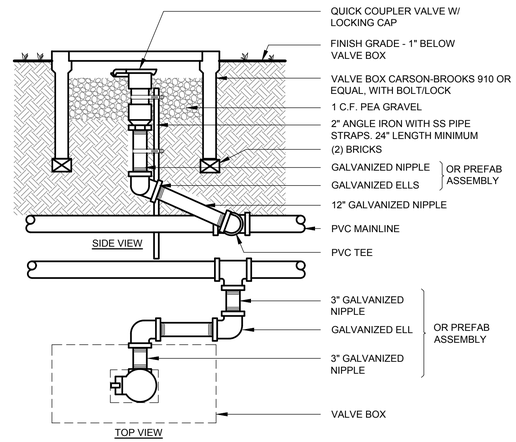

3 QUICK COUPLER IN VALVE BOX
SCALE: NONE

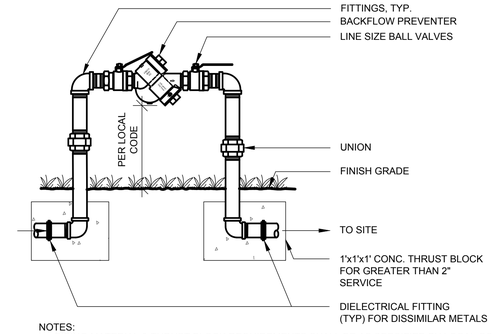

NOTES:
1. PIPING MATERIAL & THRUST BLOCK REQUIREMENTS SHALL BE AS SPECIFIED BY LOCAL CODE.
2. FOR ENCLOSURE, SEE DETAIL THIS SHEET
3. CONTRACTOR TO PROVIDE WEATHERMATIC ALL-WEATHER COVER OR EQUAL

1 BACKFLOW PREVENTER
SCALE: NONE

TESTING REQUIRED ON (E) BACKFLOW. REPLACE IF NEEDED PER TEST RESULTS. SEE NOTE 1, SHT L4.

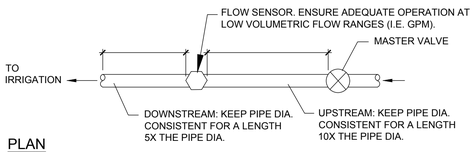

PLAN

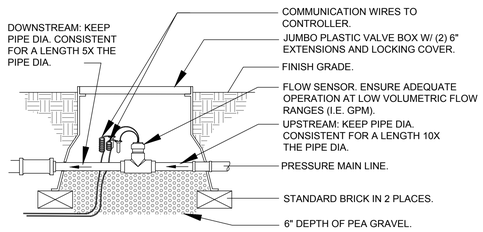

SECTION - FLOW SENSOR

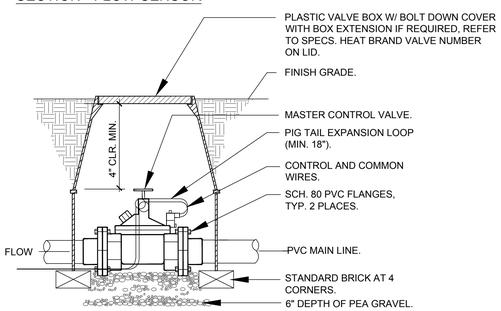

SECTION - MASTER VALVE

NOTES:
1. VALVE SHALL BE LINE SIZE UNLESS OTHERWISE NOTED.
2. PLACE IN VALVE BOX AT RIGHT ANGLES TO STRUCTURES OR HARDSCAPING.
3. REFER TO SPECS. AND PLAN SHEETS FOR MORE INFORMATION.
4. THE INSTALLATION OF A BALL VALVE UPSTREAM OF THE MASTER VALVE IS RECOMMENDED.
5. OWNER TO PROVIDE POWER.

10 FLOW SENSOR (SHUT-OFF) & MASTERVALVE
SCALE: NONE

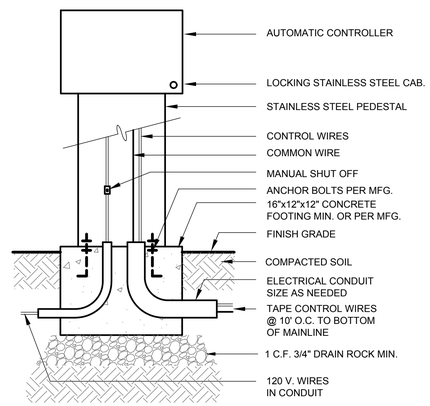

NOTE:
1. ALL WIRING INSTALLED PER LOCAL CODE AND MANUFACTURER'S RECOMMENDATIONS.
2. OWNER TO PROVIDE POWER.

7 PEDESTAL MOUNTED CONTROLLER
SCALE: NONE

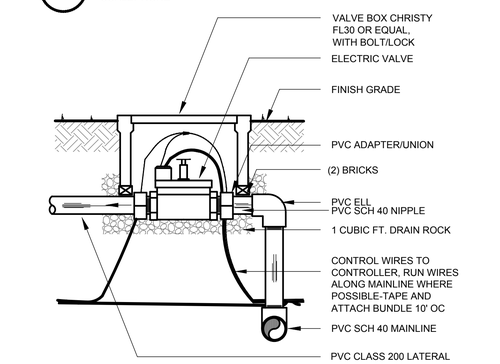

NOTES:
1. COIL 18" SLACK, EACH WIRE, IN VALVE BOX
2. SPLICE WIRES ONLY IN VALVE BOX
3. USE WATER-PROOF WIRE CONNECTORS FOR ALL WIRE SPLICES.
4. SET VALVE BOXES ON BRICKS, (3) FOR ROUND BOXES, (4) FOR RECT.

4 ELECTRIC VALVE ASSEMBLY
SCALE: NONE

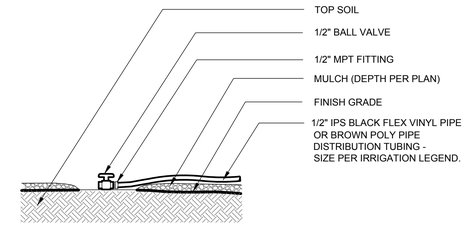

FLUSH CAP / VALVE
SCALE: NONE

EMITTER SCHEDULE/PLACEMENT - PLAN VIEW:

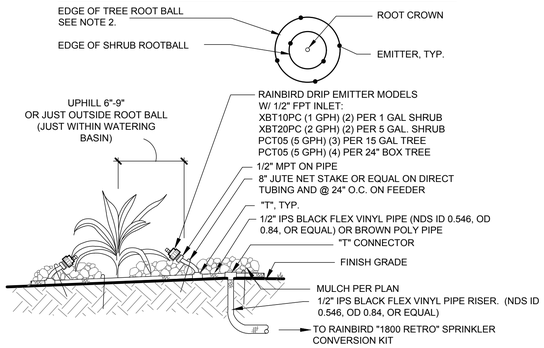

1. ADDITIONAL IN LINE P.R.V.'S TO BE INSTALLED IF PRESSURE EXCEEDS DRIPPER AND IF LOW EMITTER DRAINAGE OCCURS WHEN RCV SHUTS OFF. CONTRACTOR TO TEST SYSTEM AND ADD IN-LINE CHECK VALVE AS NEEDED.
2. USE TEFLON TAPE ON ALL THREADED CONNECTIONS.
3. PROVIDE (1) FLUSH CAP/VALVE PER CIRCUIT.

2 DRIP EMITTER ASSY - ON GRADE
SCALE: NONE

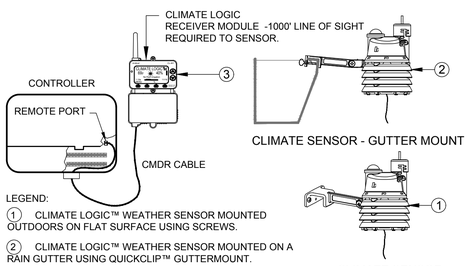

LEGEND:
1 CLIMATE LOGIC™ WEATHER SENSOR MOUNTED OUTDOORS ON FLAT SURFACE USING SCREWS.
2 CLIMATE LOGIC™ WEATHER SENSOR MOUNTED ON A RAIN GUTTER USING QUICKCLIP™ GUTTERMOUNT.
3 CLIMATE LOGIC™ RECEIVER MODULE MOUNTED INDOORS NEAR THE COMPATIBLE CONTROLLER. MOUNT WITH SCREWS AT EYE LEVEL OR IF IN A SECURE AREA, MOUNT ON HOOK AND LOOP TYPE STRIPS FOR DISMOUNTING AND HANDHELD PROGRAMMING UTILIZING THE SLACK IN THE CORD.

NOTES:
1. ALL ELECTRICAL WORK MUST CONFORM TO LOCAL CODES. REFER TO PRODUCT LITERATURE FOR ADDITIONAL INSTALLATION REQUIREMENTS.
2. INSTALLATION TO BE COMPLETED IN ACCORDANCE WITH MANUFACTURER'S SPECIFICATIONS.
3. CONTRACTOR TO COORDINATE WITH OWNER FOR MOUNTING LOCATION

8 WIRELESS CLIMATE SENSOR
SCALE: NONE

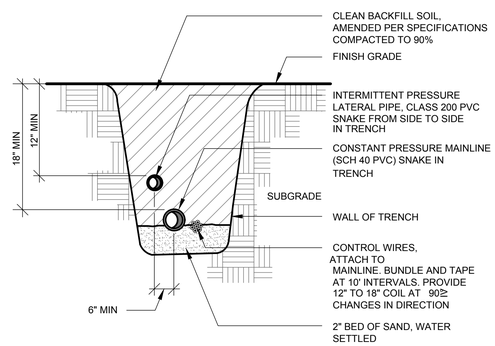

NOTES:
1. CONTROL WIRES TO BE #14 AWG DIRECT BURIAL
2. WIRE RUNS TO BE CONTINUOUS, NO IN-LINE SPLICING
3. ALL WIRE SPLICES TO BE WITH WATER-PROOF CONNECTORS, AND OCCUR ONLY IN VALVE BOXES

5 IRRIGATION PIPE TRENCH
SCALE: NONE

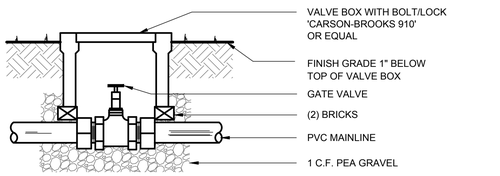

11 GATE VALVE
SCALE: NONE

Stantec
Architecture Inc.
1383 North McDowell Blvd. Suite 250
Petaluma, CA 94954
TEL 707.765.1660
www.stantec.com

The Contractor shall verify and be responsible for all dimensions. DO NOT scale the drawing - any errors or omissions shall be reported to Stantec without delay. The copyrights to all designs and drawings are the property of Stantec. Reproduction or use for any purpose other than that authorized by Stantec is forbidden.

Revision	By	Appd.	YY.MM.DD
1 REVISED PER CITY			

Issued	By	Appd.	YY.MM.DD
MWR	GAM	MWR	12-16-19

Client/Project
CROWN HILL MATERIALS LLC
LANDSCAPE IMPROVEMENTS
VALLEJO, CALIFORNIA 94589
Title
LANDSCAPE IRRIGATION DETAILS

Permit-Seal
REGISTERED LANDSCAPE ARCHITECT NATASHA RUTH #2234 STATE OF CALIFORNIA
SIGNATURE
6 / 30 / 21
RENEWAL DATE
12-16-19
DATE

Project Number: 2042562400
File Name:

Dwn.	Chkd.	Dsgn.	YY.MM.DD

Drawing No. L6
Revision -
Sheet - of -

\\US0352-PPFSSP1\workgroup\2042\active\2042562400\landscape\design\drawing\2042562400_L6_Irrigation Details.dwg
2019/12/16 3:48 PM By: MaBaDA, Gayyn

ORIGINAL SHEET - ARCH D

SECTION I - PLANTING

PART 1 - GENERAL

1.1 DESCRIPTION OF WORK

A. FURNISH ALL LABOR, EQUIPMENT AND MATERIALS FOR THE PROPER INSTALLATION OF PLANTS, LAWN, AND ASSOCIATED FEATURES.

B. NOTES ON L1 SUPERSEDE THESE STANDARD SPECIFICATIONS.

PART 2 - MATERIALS

2.1 PLANTS

A. ALL SUBSTITUTIONS TO BE APPROVED BY THE LANDSCAPE ARCHITECT.

B. QUALITY:

1. PLANTS SHALL CONFORM WITH AMERICAN ASSOCIATION OF NURSERYMEN STANDARDS ANSI 260.1
2. PLANTS SHALL BE SYMMETRICAL AND TYPICAL FOR VARIETY AND SPECIES.
3. GROUNDCOVER PLANTS SHALL BE FULL AND COMPACT, NOT "LEGGY".
4. ALL TREES AND SHRUBS SHALL BE CONTAINER GROWN OR ESTABLISHED "BOXED-OUT", FIELD-GROWN MATERIAL, UNLESS OTHERWISE SPECIFIED.
5. CONTAINER STOCK SHALL BE GROWN FOR AT LEAST EIGHT MONTHS, IN CONTAINERS IN WHICH DELIVERED. DO NOT USE CONTAINER PLANTS WITH CRACKED OR BROKEN BALLS OF EARTH.
6. DO NOT PRUNE PLANTS PRIOR TO DELIVERY, EXCEPT AS AUTHORIZED BY THE LANDSCAPE ARCHITECT.
7. PROTECT PLANTS IN TRANSIT AND AFTER DELIVERY TO THE PROJECT SITE.

C. PLANT OBSERVATIONS:

1. RIGHT OF OBSERVATION BY OWNER'S REPRESENTATIVE FOR APPROVAL OR REJECTION IS RESERVED AT THE PLACE OF GROWTH AND/OR ON THE PROJECT SITE AT ANY TIME UPON DELIVERY OR DURING THE WORK. PLANTS SHALL BE OBSERVED FOR SIZE, VARIETY, CONDITION, DEFECTS, OR INJURY. REJECTED PLANTS TO BE REMOVED OFF-SITE IMMEDIATELY.

D. CONTRACTOR TO SUBMIT PURCHASE ORDER TO LANDSCAPE ARCHITECT FOR APPROVAL OF ALL PLANT AND FERTILIZER MATERIALS AND PROPOSED SUBSTITUTIONS.

2.2 FERTILIZERS AND SOIL CONDITIONERS

A. ALL FERTILIZER AND SOIL CONDITIONERS SHALL BE ORGANIC FIRST QUALITY, STANDARD BRAND, AGRICULTURAL PRODUCT.

B. MATERIALS DELIVERY AND STORAGE: MANUFACTURED MATERIALS SHALL BE DELIVERED IN ORIGINAL CONTAINERS WITH BRAND AND MAKER'S NAME MARKED THEREON. MATERIALS IN BROKEN CONTAINERS OR SHOWING EVIDENCE OF DAMAGE WILL BE REJECTED AND MUST BE IMMEDIATELY REMOVED FROM THE SITE. ODOROUS MATERIAL SHALL NOT BE BROUGHT TO THE SITE UNTIL THEY ARE TO BE USED.

C. BARK FOR MULCHING: PER PLAN NOTES.

2.3 TOPSOIL AND LANDSCAPE FILL

A. LANDSCAPE FILL SHALL BE AS FOLLOWS:

1. NATIVE SOIL IF NATIVE SOIL IS AVAILABLE AND MEETS ALL CRITERIA OF 2.3B, IT CAN BE PLACED OVER NATIVE SOIL ONLY AS FILL
2. COMPATIBLE IMPORTED FILL 'COMPATIBLE' MEANS A SOILS TEST WAS SUBMITTED ON PROPOSED FILL AND WAS APPROVED BY THE LANDSCAPE ARCHITECT AS COMPATIBLE WITH NATIVE SOIL AND CAN BE USED AS FILL.
3. UNDER NO CIRCUMSTANCES ARE SOILS TO BE PLACED IN INCOMPATIBLE LAYERS.

B. TOPSOIL GENERATED FROM ON-SITE GRADING MAY BE USED IF IT MEETS THE FOLLOWING CRITERIA AND IS TO BE PLACED ON NATIVE SOIL ONLY. TOPSOIL SHALL CONSIST OF A UNIFORM NATURAL LOAM, FREE FROM LUMPS, CLODS, SOD, STONES LARGER THAN 3/4" IN ANY DIMENSION, STICKS, WOOD CINDERS, CONCRETE, OR ANY OTHER FOREIGN OR UNDERISREABLE MATERIALS.

C. THE ACIDITY RANGE OF IMPORTED TOPSOIL PRIOR TO TREATMENT AS SPECIFIED HEREIN SHALL BE BETWEEN PH 6.0 AND PH 7.0 INCLUSIVE.

D. IMPORTED TOPSOIL SHALL CONTAIN A MINIMUM OF 5 PERCENT AND NOT MORE THAN 20% ORGANIC MATTER DETERMINED BY LOSS ON IGNITION OF MOISTURE FREE SAMPLES.

E. THE MECHANICAL ANALYSIS OF THE IMPORTED TOPSOIL SHALL BE AS FOLLOWS:

U.S. STANDARD SIEVE NO.	% RETAINED	% PASSING
1"	0	100
1/4"	3 (MAX.)	40-60
#100	40-60	40-60

PART 3 - EXECUTION

3.1 SITE REVIEW

A. ALL SCALED DIMENSIONS ARE APPROXIMATE. CAREFULLY CHECK AND VERIFY ALL DIMENSIONS AND QUANTITIES AND IMMEDIATELY INFORM THE LANDSCAPE ARCHITECT OF ANY DISCREPANCY BETWEEN THE DRAWINGS AND/OR SPECIFICATIONS AND ACTUAL CONDITIONS. NO WORK SHALL BE DONE IN ANY AREA WHERE THERE IS SUCH A DISCREPANCY UNTIL REVIEW FOR SAME HAS BEEN GIVEN BY THE LANDSCAPE ARCHITECT.

B. COORDINATION: COORDINATE WORK WITH OTHER TRADES TO ENSURE PROPER SEQUENCING OF CONSTRUCTION.

3.2 SITE PREPARATION - CONTRACTOR TO COMPLETE THE FOLLOWING PRIOR TO STARTING WORK:

A. WEED AND DEBRIS REMOVAL:
1. ALL AREAS TO BE PLANTED SHALL BE CLEANED OF ALL WEEDS AND DEBRIS PRIOR TO ANY SOIL PREPARATION OR GRADING WORK. WEEDS AND DEBRIS SHALL BE DISPOSED OF OFF THE SITE.

B. CONTAMINATED SOIL:
1. DO NOT PERFORM ANY SOIL PREPARATION WORK IN AREAS WHERE SOIL IS CONTAMINATED WITH CEMENT, PLASTER, OIL, GASOLINE, PAINT OR OTHER CONSTRUCTION DEBRIS. BRING SUCH AREAS TO THE ATTENTION OF THE OWNER'S REPRESENTATIVE AND DO NOT PROCEED UNTIL THE CONTAMINATED SOIL IS REMOVED AND REPLACED.

C. MOISTURE CONTENT: SOIL SHALL NOT BE WORKED WHEN MOISTURE CONTENT IS SO GREAT THAT EXCESSIVE COMPACTION WILL OCCUR, NOR WHEN IT IS SO DRY THAT DUST WILL FORM IN THE AIR OR THAT CLODS WILL NOT BREAK READILY. WATER SHALL BE APPLIED, IF NECESSARY, TO BRING SOIL TO AN OPTIMUM MOISTURE CONTENT FOR TILLING AND PLANTING.

D. FINISH GRADING:
1. REESTABLISH AND MAINTAIN POSITIVE DRAINAGE AND FINISH GRADES BEFORE PLANTING. SEE CIVIL DRAWINGS.

3.3 PLANT PITS

A. EXCAVATE HOLES 2X ROOT BALL.

B. SCARIFY THE SIDES OF THE HOLES.

C. BACK FILL THE SIDES OF PLANTING HOLES WITH THE BACK FILL MIX PER SOILS TEST

D. FERTILIZER TABLETS: PLACE ORGANIC TIME RELEASE TABLETS IN THE BACK FILLED PITS PER THE MANUFACTURER'S PRINTED RECOMMENDATIONS AT THE FOLLOWING RATE: (OR PER SOILS REPORT)

1 GALLON	1 TABLET	—
5 GALLON	2 TABLETS	—
15 GALLON	4 TABLETS	—
24" BOXES	6 TABLETS	—
36" BOXES	8 TABLETS	—

3.4 PLANTING

A. TREES, SHRUBS, GROUND COVER, ETC.

1. GENERAL:

A. DO NOT INSTALL PLANT MATERIALS UNTIL ALL CONSTRUCTION WORK HAS BEEN COMPLETED AND IRRIGATION SYSTEMS ARE FULLY OPERATIONAL. PLANTING AREAS SHALL HAVE BEEN GRADED AND PREPARED.

B. SOIL SHALL BE AT AN OPTIMUM MOISTURE CONTENT FOR PLANTING.
I. DO NOT PLANT IN DRY SOIL OR MUDDY SOIL.

2. WEED CONTROL: SHEET MULCH PER L1 AND MECHANICALLY REMOVE WEEDS. DO NOT APPLY PRE-EMERGENT HERBICIDE. ANY PLANT MATERIALS SHOWING LOSS OF VIGOR OR HEALTH OWING TO OPERATIONS TO REMOVE WEEDS SHALL BE REPLACED BY THE CONTRACTOR.

B. CONTAINER PLANTS:
1. DO NOT LIFT OR HANDLE CONTAINER PLANTS BY TOPS, STEMS OR TRUNKS AT ANY TIME.
2. ALL PLANTS SHALL BE SET SO THAT, WHEN SETTLED, THE SOIL LEVEL AT CROWN OF POINT IS 1 1/2 INCHES ABOVE THE FINISHED GRADE OF LAWNS AND 1" ABOVE FINISHED GRADE OF OTHER PLANTING BEDS. TAPER FINISHED GRADE AWAY FROM ROOT BALL.
3. FERTILIZER TABLETS: REFER TO PARAGRAPH 3.3 D.
4. ALL PLANTS SHALL BE PLANTED IMMEDIATELY AFTER THE CONTAINERS ARE CUT. REMOVE CONTAINERS FROM THE SITE.
5. WATERING BASINS: FORM CIRCULAR EARTH BASIN CENTERED ON THE STEM OF EACH PLANT. THE RIM OF BASIN SHALL BE 3-4 INCHES ABOVE THE GRADE AT THE STEM. DO NOT FORM WATERING BASINS AROUND TREES IN LAWN AREAS.

C. GROUND COVER PLANTS AND ANNUAL FLOWERS:
1. INSTALL PLANTS AT SPACINGS INDICATED ON THE LEGEND AND PLANT IN STAGGERED ROWS, EVENLY SPACED, PER DETAIL.
2. DIG HOLES LARGE ENOUGH TO ALLOW FOR SPREADING OF ROOTS (2 x ROOTBALL). PLACE PLANTS SO ROOT SYSTEM LIES FREE WITHOUT DOUBLING.
3. TAMP SOIL AROUND ROOTS TO ELIMINATE AIR POCKETS.
4. WATER THOROUGHLY AFTER PLANTING, TAKING CARE NOT TO COVER CROWNS OF PLANTS WITH WET SOIL.

D. SOD INSTALLATION

1. LAY SOD TO FORM A SOLID MASS WITH TIGHTLY-FITTED JOINTS. BUTT ENDS AND SIDES OF SOD STRIPS. DO NOT OVERLAY EDGES. STAGGER STRIPS TO OFFSET JOINTS IN ADJACENT COURSES. REMOVE EXCESS SOD TO AVOID SMOTHERING OF ADJACENT GRASS. SET TOP OF SOD PAD FLUSH WITH ADJACENT CURBS, SIDEWALKS, DRAINS AND SEEDED AREAS.
2. DO NOT LAY DORMANT SOD OR INSTALL A SOD ON SATURATED OR FROZEN SOIL.
3. INSTALL INITIAL ROW OF SOD IN A STRAIGHT LINE, BEGINNING AT BOTTOM OF SLOPES, PERPENDICULAR TO DIRECTION OF THE SLOPED. PLACE SUBSEQUENT ROWS PARALLEL TO AND LIGHTLY AGAINST PREVIOUSLY INSTALLED ROW.
4. WATER SOD THOROUGHLY WITH A FINE SPRAY IMMEDIATELY AFTER LAYING.
5. ROLL WITH LIGHT LAWN ROLLER TO ENSURE CONTACT WITH SUB-GRADE.

3.5 MISCELLANEOUS ITEMS

A. MULCHING:
1. INSTALL BARK MULCH OVER PLANTING AREAS INDICATED ON THE DRAWINGS.
2. MULCH SHALL BE 3 INCHES DEEP MIN. OR TO DEPTH SHOWN ON PLANS.
3. WHERE WATERING BASINS ARE REQUIRED, FILL BASIN WITH MULCH PER DETAIL.

3.6 GENERAL CLEANUP

A. REMOVE ALL CANS, SURPLUS MATERIALS, AND OTHER DEBRIS FROM SITE. NEATLY DRESS AND FINISH ALL PLANTING AREAS. FLUSH WALKS, PAVED AREAS, ETC., CLEAN TO THE SATISFACTION OF THE THE OWNER'S REPRESENTATIVE.

B. RINSE FOLIAGE OF ALL PLANT MATERIALS WITHIN THE CONSTRUCTION AREA AS OFTEN AS NECESSARY TO KEEP THE FOLIAGE FREE FROM DUST GENERATED BY THE WORK OF THIS CONTRACT.

3.7 GUARANTEE

A. ALL TREES, SHRUBS, GROUND COVERS, AND OTHER PLANT MATERIALS SHALL BE GUARANTEED TO TAKE ROOT AND GROW AND THRIVE FOR A PERIOD OF ONE (1) YEAR AFTER FINAL ACCEPTANCE OF THE WORK.

B. ANY TREES OR OTHER PLANT MATERIALS THAT DIE BACK AND LOSE THE FORM AND SIZE ORIGINALLY SPECIFIED, SHALL BE REPLACED.

C. WITHIN 15 DAYS OF WRITTEN NOTIFICATION, REMOVE AND REPLACE ALL GUARANTEED PLANT MATERIALS WHICH, FOR ANY REASON, FAIL TO MEET REQUIREMENTS OF GUARANTEE. REPLACEMENTS SHALL BE MADE TO SAME SPECIFICATIONS REQUIRED FOR ORIGINAL MATERIALS AND SHALL CARRY THE SAME GUARANTEE FROM THE TIME THEY ARE REPLACED.

** END OF SECTION **

SECTION II - IRRIGATION

PART 1 - GENERAL

1.1 DESCRIPTION OF WORK

A. FURNISH ALL LABOR EQUIPMENT AND MATERIALS NECESSARY FOR THE COMPLETE IRRIGATION SYSTEM INSTALLATION AS SHOWN ON THE DRAWINGS AND SPECIFIED HERIN.

1.2 QUALITY ASSURANCE

A. STANDARDS, SPECIFICATIONS AND CODES:
1. ALL WORK SHALL BE IN FULL ACCORDANCE WITH THE LATEST RULES AND REGULATIONS OF THE SAFETY ORDERS OF THE DIVISION OF INDUSTRIAL SAFETY, THE UNIFORM PLUMBING CODE AND OTHER APPLICABLE STATE OR LOCAL CODES OR REGULATIONS. NOTHING ON THE PLANS OR IN THE SPECIFICATIONS SHALL TAKE PRECEDENCE OVER THE REQUIREMENTS OF SAID RULES AND REGULATIONS.
2. THE CONTRACTOR SHALL FURNISH, WITHOUT EXTRA CHARGE, ANY ADDITIONAL MATERIAL AND/OR LABOR WHEN REQUIRED BY THE COMPLIANCE WITH THE ABOVE RULES AND REGULATIONS THOUGH THE WORK BE NOT MENTIONED IN THESE PARTICULAR SPECIFICATIONS OR SHOWN ON THE DRAWINGS.

B. WHEREVER THE TERM "AS PER MANUFACTURER'S SPECIFICATIONS AND/OR INSTRUCTIONS," IS USED, IT SHALL MEAN IN STRICT ACCORDANCE WITH THE MANUFACTURER'S PRINTED DIRECTIONS. IF THESE DIRECTIONS CONFLICT WITH THIS SPECIFICATION, THE MATTER SHALL BE BROUGHT TO THE OWNER'S REPRESENTATIVE'S ATTENTION AND HIS/HER INSTRUCTIONS OBTAINED BEFORE PROCEEDING WITH THE WORK.

1.3 SUBMITTALS

A. MATERIALS LIST:
1. LIST ALL MATERIALS BY MANUFACTURER'S NAME AND MODEL NUMBER.
2. ONLY MATERIALS AND ITEMS OF EQUIPMENT SPECIFIED SHALL BE USED. PROP©SED SUBSTITUTIONS SHALL BE INCLUDED WITH MATERIALS LIST, FOR APPROVAL.

B. MANUALS:
1. PRIOR TO THE FINAL ACCEPTANCE OF THE IRRIGATION SYSTEM, THE CONTRACTOR SHALL FURNISH THREE (3) INDIVIDUALLY BOUND SERVICE MANUALS TO OWNER. THE MANUALS SHALL CONTAIN COMPLETE EXPLODED DRAWINGS, DIAGRAMS AND SPARE PARTS LISTS OF ALL EQUIPMENT INSTALLED SHOWING COMPONENTS AND CATALOG NUMBERS TOGETHER WITH THE MANUFACTURER'S NAME AND ADDRESS. IN ADDITION, EACH SERVICE MANUAL SHALL CONTAIN THE FOLLOWING:
A. INDEX SHEET INDICATING THE CONTRACTOR'S NAME, ADDRESS AND PHONE NUMBER.
B. COPIES OF EQUIPMENT WARRANTIES AND CERTIFICATES.
C. LIST OF EQUIPMENT WITH NAMES, ADDRESSES AND TELEPHONE NUMBERS OF ALL LOCAL MANUFACTURER'S REPRESENTATIVES.
D. COMPLETE OPERATING AND MAINTENANCE INSTRUCTIONS IN SUFFICIENT DETAIL TO PERMIT OPERATING PERSONNEL TO UNDERSTAND, OPERATE AND MAINTAIN ALL EQUIPMENT.

C. CONSTRUCTION RECORD DRAWINGS:
1. CONTRACTOR TO PROVIDE DRAWINGS OF THE IRRIGATION SYSTEM (REASONABLY DRAFTED) AS INSTALLED, SHOWING ALL CHANGES TO ORIGINAL DRAWINGS.

1.4 FEES AND PERMITS

A. CONTRACTOR TO OBTAIN ALL FEES, PERMITS, LICENSES AND REQUIRED INSPECTIONS BY CONCERNED GOVERNING AGENCIES, AS PART OF THIS WORK.

PART 2 - MATERIALS

2.1 GENERAL

A. ALL MATERIALS THROUGHOUT THE SYSTEM SHALL BE NEW AND IN PERFECT CONDITION.

2.2 PIPE AND EQUIPMENT

A. PIPE:
1. ALL PIPE SHALL BE FREE OF BLISTERS, INTERNAL STRIATIONS OR ANY OTHER DEFECTS OR IMPERFECTIONS. THE PIPE SHALL BE CONTINUOUSLY AND PERMANENTLY MARKED WITH THE MANUFACTURER'S NAME, MATERIAL TYPE, SIZE, SCHEDULE OR CLASS AND QUALITY CONTROL IDENTIFICATIONS.
2. BRASS (WHEN APPLICABLE): 85% RED BRASS, ANSI SCHEDULE 40
3. COPPER (WHEN APPLICABLE): TYPE K, RIGID COPPER
4. PIPE SLEEVES TO EXTEND 18" BEYOND BACK OF CURB OR WALK

B. PIPE FITTINGS:
1. PLASTIC: POLYVINYL CHLORIDE (PVC).
A. SOLVENT WELD AS SPECIFIED ON THE DRAWINGS.
2. BRASS (WHEN APPLICABLE): MEDIUM BRASS, CLASS 125 PSI THREADED FITTINGS.
3. COPPER (WHEN APPLICABLE): WROUGHT COPPER, SOLDER JOINT FITTINGS.

C. REMOTE CONTROL WIRE:
1. ALL WIRE SHALL BE SOLID COPPER 600 VOLT AC, TYPE UF-AWG, UL APPROVED FOR DIRECT BURIAL. WIRE SHALL BE CONTINUOUSLY AND PERMANENTLY MARKED WITH THE MANUFACTURER'S NAME, WIRE SIZE AND IDENTIFICATION. WIRE RUNS SHALL BE CONTINUOUS (NO SPLICES).
2. COLOR OF CONTROL WIRES SHALL BE AS FOLLOWS:
A. PILOT WIRES - # 14 BLACK OR COLOR
B. COMMON WIRE - # 14 WHITE ONLY

D. GATE VALVES:
1. ALL BRASS OR BRONZE DOUBLE DISC, NON-RISING STEM.
2. 150 PSI WORKING PRESSURE.
3. ALL VALVES SHALL BE LINE SIZE.

PART 3 - EXECUTION

3.1 COORDINATION: SCHEDULE AND COORDINATE THE WORK BELOW WITH OTHER TRADES OR CONTRACTORS.

A. INSTALL PIPE AND SLEEVES UNDER PAVING AND THROUGH WALLS AND FOOTINGS.
B. DO NOT INSTALL SPRINKLER HEADS UNTIL WALLS, CURBS, HEADERS AND OTHER RELATED STRUCTURES ARE IN PLACE.
C. DO NOT INSTALL PIPE UNTIL PLANTING AREAS HAVE BEEN SCARIFIED UNDER PLANTING WORK.

3.2 INSTALLATION

A. LAYOUT:
1. LAY OUT WORK AS ACCURATELY AS POSSIBLE IN ACCORDANCE WITH THE DRAWINGS.
2. WHERE SITE CONDITIONS DO NOT PERMIT LOCATING PIPING, VALVES AND HEADS WHERE SHOWN, NOTIFY THE OWNER'S REPRESENTATIVE IMMEDIATELY AND DO NOT PROCEED UNTIL HIS/HER INSTRUCTIONS ARE OBTAINED.
3. RUN PIPE LINES AND AUTOMATIC CONTROL WIRING IN COMMON TRENCHES WHERE POSSIBLE AND PRACTICAL.
4. NOTIFY THE OWNER'S REPRESENTATIVE OF ANY ASPECTS OF LAYOUT WHICH WILL PROVIDE INCOMPLETE OR INSUFFICIENT WATER COVERAGE OF PLANT MATERIAL AND DO NOT PROCEED UNTIL HIS/HER INSTRUCTIONS ARE OBTAINED.
5. LOCATE ALL UNDERGROUND UTILITY LINES PRIOR TO EXCAVATING IRRIGATION TRENCHES AND BRING ANY CONFLICTS TO THE ATTENTION OF THE OWNER'S REPRESENTATIVE. DO NOT PROCEED WITH THE WORK UNTIL INSTRUCTIONS ARE RECEIVED FROM THE OWNER'S REPRESENTATIVE.

B. PROTECTION:
1. PROTECT EXISTING AND NEW WORK AT ALL TIMES. ANY LEAKS ON NEW OR EXISTING PIPES AND ANY EXISTING BUILDINGS, EQUIPMENT, PIPING, PIPE COVERINGS, SEWERS, SIDEWALKS, LANDSCAPING, ETC., DAMAGED BY THE CONTRACTOR DURING THE COURSE OF THE WORK SHALL BE REPLACED OR REPAIRED BY THE CONTRACTOR IN A MANNER SATISFACTORY TO THE OWNER AND AT THE CONTRACTOR'S OWN EXPENSE. REPAIR BEFORE THE FINAL PAYMENT IS MADE.

C. EXCAVATING AND TRENCHING:
1. EXCAVATION SHALL BE IN ALL CASES AMPLE IN SIZE TO PERMIT THE PIPES TO BE LAID AT THE ELEVATIONS INTENDED AND TO PERMIT AMPLE SPACE FOR JOINING.

D. ASSEMBLING PIPELINES:
1. ALL PIPE SHALL BE ASSEMBLED FREE FROM DIRT AND PIPE SCALE. FIELD-CUT ENDS SHALL BE REAMED AND SANDED TO REMOVE ROUGH EDGES AND BURRS.
2. SOLVENT-WELD JOINT:
A. SOLVENT CEMENT AND PRIMER: FOR SOLVENT WELD JOINTS SHALL BE OF MAKE AND TYPE APPROVED BY MANUFACTURER(S) OF PIPE AND FITTINGS. CEMENT SHALL BE MAINTAINED AT PROPER CONSISTENCY THROUGHOUT USE.
B. COAT THE INSIDE SOCKET SURFACE OF THE FITTING AND THE EXTERNAL SURFACE OF THE MALE END OF THE PIPE WITH PRIMER. THEN, WITHOUT DELAY, APPLY CEMENT LIBERALLY TO THE MALE END OF THE PIPE AND ALSO APPLY CEMENT LIGHTLY TO THE INSIDE OF THE SOCKET. AT THIS TIME, APPLY A SECOND COAT OF CEMENT OF THE PIPE END.
C. INSERT PIPE IMMEDIATELY INTO FITTING AND TURN ONE-QUARTER TURN TO DISTRIBUTE CEMENT AND REMOVE AIR BUBBLES. THE PIPE MUST SEAT TO THE BOTTOM OF THE SOCKET AND FITTING. CHECK ALIGNMENT OF THE FITTINGS.

E. LAYING PIPE:
1. PIPE SHALL BE BEDDED ON AT LEAST 2 INCHES OF FINELY DIVIDED MATERIAL WITH NO ROCKS OR CLODS OVER 1 INCH IN DIAMETER, TO PROVIDE A FIRM UNIFORM BEARING.
2. PVC PIPE SHALL BE SNAKED FROM SIDE TO SIDE OF TRENCH BOTTOM TO ALLOW FOR EXPANSION AND CONTRACTION. ONE ADDITIONAL FOOT PER 100 FEET OF PIPE IS THE MINIMUM ALLOWANCE FOR SNAKING (FOR SOLVENT-WELD PIPE ONLY).
3. CAP OR PLUG OPENINGS AS PIPELINE IS ASSEMBLED TO PREVENT ENTRANCE OF DIRT OR OBSTRUCTION. REMOVE CAPS OR PLUGS ONLY WHEN NECESSARY TO CONTINUE ASSEMBLY.

F. REMOTE-CONTROL VALVES:
1. INSTALL WHERE SHOWN AND GROUP TOGETHER WHERE PRACTICAL. LIMIT ONE RCV PER VALVE BOX.
2. INSTALL VALVES NO FARTHER THAN 12 INCHES FROM MAIN LINE UNLESS ABSOLUTELY NECESSARY.
3. THOROUGHLY FLUSH MAIN LINE BEFORE INSTALLING VALVE.
4. PLACE ALL CONTROL VALVES IN VALVE BOXES; USE EXTENSIONS AS NECESSARY TO KEEP SOIL AWAY FROM VALVES AND SOLENOIDS. NO SOIL ALLOWED AROUND VALVE.
5. INSTALL BOX FLUSH AND LEVEL WITH GRADE.
6. INSTALL 1 C.F. GRAVEL, 3/4" NON-GRADED, IN BASE OF VALVE BOX.

G. GATE VALVES:
1. INSTALL WHERE SHOWN ON THE DRAWINGS.
2. INSTALL IN 10-INCH DIAMETER PLASTIC VALVE BOX WITH TWIST LOCK COVER.

H. FLUSHING LINES:
1. FLUSH ALL ROCK, SAND AND DEBRIS FROM THE LINES.
2. FLUSH MAIN LINES PRIOR TO INSTALLING VALVES AND CONNECTING LATERAL LINES.
3. FLUSH LONG DEAD END RUNS PRIOR TO CAPPING PIPE.
4. FLUSH LATERAL LINES PRIOR TO INSTALLING HEADS AND BUBBLERS. CONTINUE FLUSHING PROCESS WITH WATER RUNNING SLOWLY AS HEADS ARE INSTALLED STARTING CLOSEST TO VALVE AND WORKING OUTWARD.

I. TESTING PIPE:
1. PIPE SHALL BE CENTER LOADED WITH SUFFICIENT BACK FILL IN ACCORDANCE WITH THE PARAGRAPH ON BACK FILLING TO ANCHOR PIPE BEFORE TESTING. NO FITTINGS SHALL BE COVERED.
2. INSTALL REMOTE-CONTROL VALVES PRIOR TO TESTING.
3. TESTS WILL BE OBSERVED AND APPROVED BY THE OWNER'S REPRESENTATIVE.
4. PERFORM TESTING AND FURNISH ALL EQUIPMENT FOR TESTING AS WORK OF THIS SECTION.
5. APPLY THE FOLLOWING TESTS AFTER SOLVENT-WELD PLASTIC PIPE JOINTS HAVE CURED AT LEAST 24 HOURS:
A. TEST MAIN LINES HYDROSTATICALLY TO 125 PSI FOR SIX (6) HOURS. THE CONTRACTOR SHALL MAKE REPAIRS AND RE-TEST AS NECESSARY UNTIL TEST CONDITIONS ARE MET.
B. TEST LATERAL LINES WITH WATER AT LINE PRESSURE AND VISUALLY INSPECT FOR LEAKS. RETEST AFTER CORRECTING DEFECTS.

J. BACK FILLING PIPE:
1. DO NOT BACK FILL UNTIL PIPE HAS BEEN TESTED AND APPROVED.
2. BACK FILL MATERIAL SHALL BE THE EARTH EXCAVATED FROM THE TRENCHES, FREE FROM ROCKS, CONCRETE CHUNKS, AND OTHER FOREIGN OR COARSE MATERIALS.
A. BACK FILL TO DEPTH OF 6 INCHES ABOVE THE TOP OF PIPE SHALL BE FINELY DIVIDED MATERIAL FREE OF ROCKS OR CLODS OVER 1/2 INCHES IN DIAMETER.
B. REMAINING BACK FILL SHALL BE FREE OF ROCKS AND CLODS OVER 2 INCHES IN DIAMETER.
C. SETTLE TRENCHES WITH WATER AND/OR TAMPING.

K. AUTOMATIC CONTROLLER:
1. LOCATE CONTROLLERS IN GENERAL LOCATION SHOWN ON THE DRAWINGS WITH EXACT PLACEMENT TO BE DETERMINED IN THE FIELD.
2. CONNECT CONTROL LINES TO CONTROLLER IN SEQUENTIAL ARRANGEMENT ACCORDING TO ASSIGNED IDENTIFICATION NUMBER OF VALVE. CONTROL LINES SHALL BE LABELED AT CONTROLLER WITH PERMANENT NONFADING LABELS INDICATING IDENTIFICATION NUMBER OF VALVE CONTROLLED.
3. PROVIDE A 120 VOLT WATERPROOF, DISCONNECT SWITCH ON THE SERVICE LINE; MOUNT INSIDE THE CONTROLLER ENCLOSURE.

L. BACKFLOW-PREVENTION ASSEMBLY:
1. INSTALL BACKFLOW-PREVENTION DEVICES PER LOCAL CODE AND AS DETAILED.

M. SPRINKLER HEADS, QUICK-COUPLER VALVES, EMITTERS AND BUBBLERS:
1. THOROUGHLY FLUSH LINES BEFORE INSTALLING EQUIPMENT.

N. COVERAGE TEST:
1. WHEN THE IRRIGATION SYSTEM HAS BEEN COMPLETED, A COVERAGE TEST SHALL BE PERFORMED IN THE PRESENCE OF OWNER'S REPRESENTATIVE TO DETERMINE IF COVERAGE OF WATER AFFORDS PLANTING AREA COVERAGE.
2. CHANGE ANY HEADS, NOZZLES, EMITTERS OR BUBBBLERS AS MAY BE REQUIRED TO PROVIDE SATISFACTORY COVERAGE.
3. ADJUST ALL SPRINKLERS, EMITTERS AND BUBBLERS TO AVOID OVER SPRAY ON BUILDING WALL OR MONUMENT SIGN OR PROVIDING EXCESS WATER.

O. SYSTEM TESTS:
1. PRIOR TO FINAL ACCEPTANCE OF IRRIGATION SYSTEM, THE AUTOMATIC SPRINKLER CONTROLLERS SHALL BE TESTED THROUGH ALL THEIR CYCLES IN THE PRESENCE OF THE OWNER'S REPRESENTATIVE AND ANY NECESSARY ADJUSTMENTS SHALL BE MADE.

P. WRENCHES AND KEYS:
1. PROVIDE DEALER. AT COMPLETION OF THE PLANTING-MAINTENANCE PERIOD WITH THREE (3) EACH OF ALL OPERATING AND SERVICING KEYS AND WRENCHES REQUIRED FOR COMPLETE MAINTENANCE AND OPERATION OF ALL VALVES. INCLUDE ALL WRENCHES NECESSARY FOR COMPLETE DISASSEMBLY OF ALL VALVES.

3.3 GUARANTEE

A. REPAIR OF DAMAGE: ALL DAMAGE TO PAVING, PLANTING, STRUCTURES, AND OTHER IMPROVEMENTS DUE TO SETTLEMENT OF IMPROPERLY COMPACTED TRENCH BACK FILL SHALL BE PROMPTLY REPAIRED TO THE SATISFACTION OF THE OWNER'S REPRESENTATIVE.

B. ALL MATERIALS AND WORKMANSHIP SHALL BE AS SPECIFIED AND SHALL, FOR A MINIMUM PERIOD OF ONE (1) YEAR, BEGINNING AT THE DATE OF FINAL ACCEPTANCE, BE AND PERFORM REQUIRED TO COMPLETE SATISFACTION OF OWNER'S REPRESENTATIVE. AT THE END OF THIS PERIOD, ALL REPAIRS AND ADJUSTMENTS, INCLUDING ADJUSTMENT TO GRADE, SHALL BE MADE INCLUDING ALL REPAIRS TO OTHER WORK MADE NECESSARY THEREBY, WITHOUT ADDITIONAL EXPENSE TO OWNER'S REPRESENTATIVE.

C. PRESENT TO CONSTRUCTION RECORD DRAWINGS, AND ALL MANUALS AND TOOLS DESCRIBED ABOVE TO OWNER AT FINAL ACCEPTANCE.

** END OF SECTION **

SECTION III - MAINTENANCE

PART 1 - GENERAL

1.1 DESCRIPTION OF WORK

A. PROVIDE ALL MATERIALS, EQUIPMENTS AND LABOR TO COMPLETE MAINTENANCE OPERATIONS.

PART 2 - MATERIALS

2.1 PROVIDE ALL MATERIALS, CHEMICALS, FERTILIZER, REPLACEMENT PLANTS AND EQUIPMENT AS REQUIRED TO MAINTAIN THE PROJECT AS DESCRIBED BELOW.

PART 3 - EXECUTION

3.1 PLANT MATERIALS

A. MAINTENANCE OF PLANTING:
1. CONTINUOUSLY MAINTAIN ALL PLANTINGS, GRASSES AND LAWN IN AREAS INCLUDED IN THE CONTRACT FROM THE BEGINNING OF CONTRACT WORK, DURING THE PROGRESS OF WORK.
2. TREE/SHRUB CARE:
A. INSECTICIDES, HERBICIDES, FUNGICIDES SHALL BE THE FINEST QUALITY OBTAINABLE.
B. CHEMICALS SHALL BE DESIGNED FOR THE PROBLEM AND APPLIED IN A PROFESSIONAL MANNER.
C. PRUNING SHALL BE DONE BY A QUALIFIED PROFESSIONAL USING APPROVED METHODS/TECHNIQUES.
D. PRUNE ONLY TO CORRECT MIS-SHAPING, ENCROACHMENT OR REMOVE DAMAGED/DEAD WOOD.
E. AVOID MAJOR PRUNING DURING SUMMER MONTHS: POTENTIAL DAMAGE IS PREVALENT.
F. REMOVE WEEDS THROUGH CHEMICAL AND/OR MANUAL METHODS.
G. CONTROL DISEASE AND INSECT INFESTATIONS WITH APPROVED CHEMICALS.
H. FERTILIZE TREES/SHRUBS AT 60 DAYS WITH A BALANCED 15-5-7 SLOW RELEASE FERTILIZER AT MANUFACTURER'S RECOMMENDED RATES.
3. REPLACEMENTS: IMMEDIATELY REPLACE ANY PLANT MATERIALS THAT DIE OR ARE DAMAGED. REPLACEMENTS SHALL BE MADE TO THE SPECIFICATIONS AS REQUIRED FOR ORIGINAL PLANTINGS.
4. CONDITION OF PLANTINGS AT THE END OF THE MAINTENANCE PERIOD:
A. ALL PLANT MATERIALS SHALL BE LIVE, HEALTHY, UNDAMAGED, AND FREE FROM INFESTATIONS.
B. GROUND COVER, SHRUB AREAS, AND OTHER PLANTING AREAS SHALL BE FREE OF ALL WEEDS (BROADLEAF AND GRASS WEEDS).
C. PLANTINGS THAT DO NOT CONFORM TO SPECIFICATIONS SHALL BE REPLACED AND BROUGHT TO A SATISFACTORY CONDITION BEFORE FINAL ACCEPTANCE OF THE WORK CAN BE MADE.

3.2 IRRIGATION SYSTEM

A. MAINTENANCE OF IRRIGATION:
1. CONTINUOUSLY MAINTAIN ALL IRRIGATION EQUIPMENT IN AREAS INCLUDED IN THE CONTRACT FROM THE BEGINNING OF CONTRACT WORK, DURING THE PROGRESS OF WORK
A. IRRIGATION SYSTEM SHALL BE IN A FULLY ADJUSTED/OPERATIONAL CONDITION AT ALL TIMES.
B. IF SPRAY, MAINTAIN "HEAD-TO-HEAD" 100% COVERAGE AT ALL PLANT AREAS.
C. EVALUATE COMPLETE OPERATION OF SYSTEM AT LEAST 4 TIMES DURING MAINTENANCE PERIOD.
D. REPAIRS SHALL BE MADE WITHIN 24 HOURS OF NOTIFICATION, UNLESS OTHERWISE APPROVED.
E. HAND-WATER IF SYSTEM IS INOPERABLE OR NOT IN PLACE.
F. ADJUST CONTROLLER TO PREVAILING WE

SITE PLAN
1888 BROADWAY STREET
VALLEJO, CA 94589
APN 0052090210

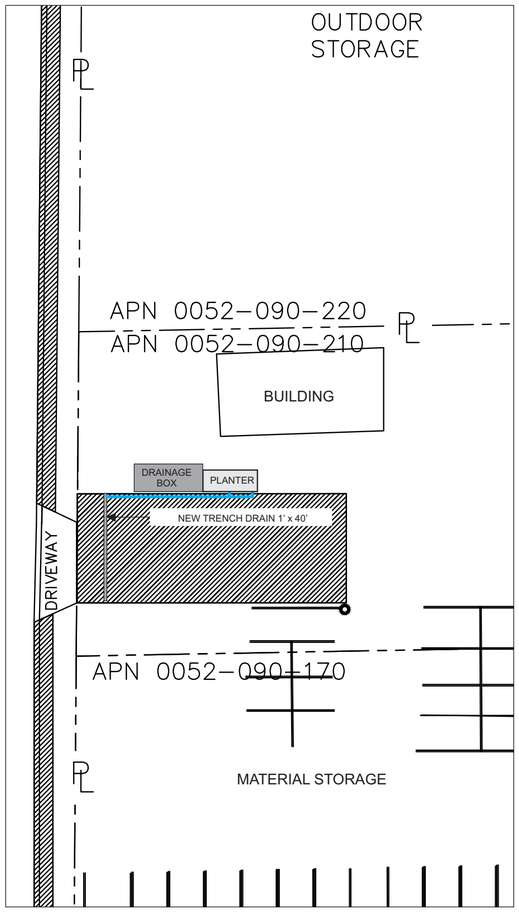

1 Inch = 40 Feet
0 feet 20 feet

North

LOCATION MAP

North

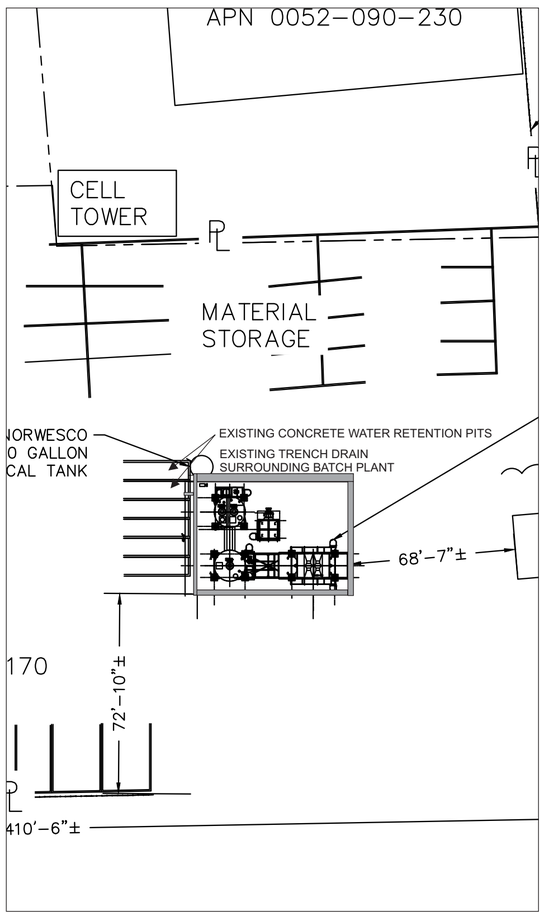

Drainage Box

Cross-section
Not to Scale

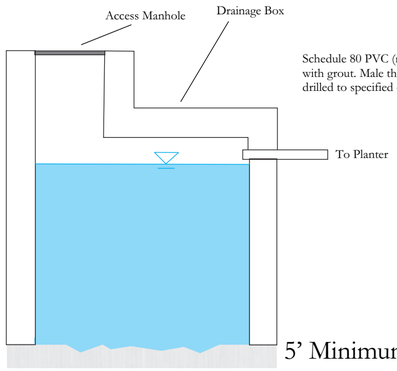

5' Minimum Depth of Bottom

25' x 10' Drainage Box

Flow-through Planter

Cross-section
Not to Scale

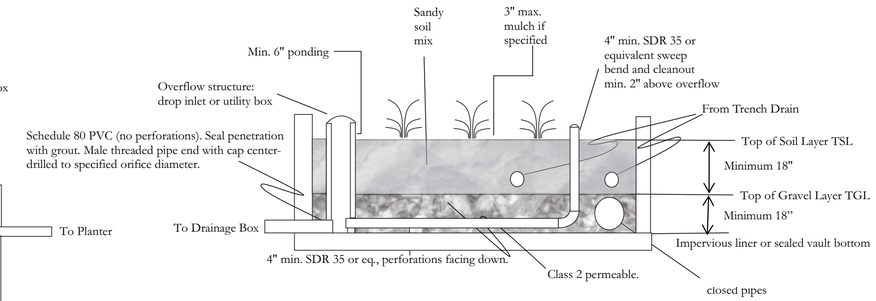

8' x 20' Planter Box

Trench Drain

Cross-section
Not to Scale

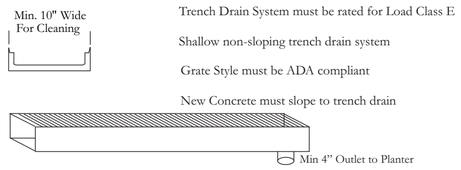

NOTICE AND DISCLAIMER

THE PLANS AND/OR SPECIFICATIONS (DOCUMENTS) ARE THE PROPERTY OF ENVIRO ASSESSMENT, PC ("EAPC") AND BY USING THE DOCUMENTS YOU AGREE TO BE BOUND BY THE TERMS AND CONDITIONS IN THIS NOTICE AND DISCLAIMER.

THE USE OF THE DOCUMENTS CREATES NO DUTY IN CONTRACT, TORT, EQUITY OR OTHERWISE OF EAPC TO THE USER. THE USER SHALL NOT (I) DISSEMINATE THE DOCUMENTS, OR ANY PART THEREOF, TO OTHERS WITHOUT THE WRITTEN CONSENT OF EAPC, OR (II) USE THE DOCUMENTS, OR ANY PART THEREOF, FOR ANY USE OTHER THAN CONSENT OF EAPC, OR (II) USE THE DOCUMENTS, OR ANY PART THEREOF, FOR ANY USE OTHER THAN AS DESIGNATED HEREIN FOR THE INTENDED PROJECT. THE DOCUMENTS ARE NOT INTENDED FOR USE IN CREATING DTM FOR GRADING OR EARTHWORK, SURVEY STAKING LAYOUT (UNLESS SPECIFICALLY IDENTIFIED AS SUCH IN THE DOCUMENTS), OR PROPERTY BOUNDARY LAYOUTS.

EAPC AND ITS AGENTS SHALL NOT BE LIABLE FOR ANY DAMAGES OR CLAIMS ARISING OUT OF THE UNAUTHORIZED USE OR MISUSE OF THE DOCUMENTS , OR ANY PART THEREOF, WHETHER SUCH DAMAGE OR CLAIM IS BASED IN CONTRACT, TORT OR OTHERWISE.

THE USER HEREBY RELEASES AND SHALL DEFEND, INDEMNIFY AND HOLD EAPC AND ITS AGENTS HARMLESS FROM ANY DAMAGES OR CLAIMS ARISING OUT OF, OR RELATED IN ANY WAY TO, THE USER'S UNAUTHORIZED USE OR MISUSE OF THE DOCUMENTS, OR ANY PART THEREOF. IF THE DOCUMENTS ARE PROVIDED IN ELECTRONIC FORMAT, THE ELECTRONIC DOCUMENTS ARE SUBJECT TO THE PROVISIONS OF EAPC's "ELECTRONIC DOCUMENT/DATA LIMITED LICENSE".

SHEET INDEX

1. SITE PLAN

REVISIONS	DATE	JDR	BY
FIRST SUBMITTAL	06/21/19	JR	
Included Additional Areas	12/09/19	JR	

ENVIRO ASSESSMENT, PC
Environmental • Hydro • Geology
ENVIRO ASSESSMENT< PC
PO BOX 1154
BONNERS FERRY, ID 83805
(844) 327-7156

STORMWATER CONTROL PLAN
1888 BROADWAY ST
VALLEJO, CA 94589

Date: 06/21/19
Checked: JR
Designed: JR
2019-05-002

SHEET
1
Of 1 SHEET

EA PROJECT #
2019-05-002

ENVIRO ASSESSMENT, PC

Environmental • Hydro • Geology

STORMWATER CONTROL PLAN
for
BROADWAY & TUOLUMNE STREET PROPERTY
1888 BROADWAY & 2801 TUOLUMNE STREET
VALLEJO, CA 94589
6/7/2019
Revised 12/9/19

Bunty Sidhu
1888 Browdway Street, Vallejo, CA 94589
(707) 704-3195
Bunty@crownhillmaterials.com

prepared by:
James Robinson
Enviro Assessment, PC.
James@enviroassess.com
Phone 844-742-7311

Project Number 2019-05-002

This document was prepared for use only by the client, only for the purposes stated, and within a reasonable time from issuance. Non-commercial, educational, and scientific use of this report by regulatory agencies is regarded as a "fair use" and not a violation of copyright. Regulatory agencies may make additional copies of this document for internal use. Copies may also be made available to the public as required by law. The reprint must acknowledge the copyright and indicate that permission to reprint has been received.

TABLE OF CONTENTS

I. Project Data [Complete the following table and include in Stormwater Control Plan.] 1

II. Setting 2

II.A. Project Location and Description 2

II.B. Existing Site Features and Conditions 2

II.C. Opportunities and Constraints for Stormwater Control 3

III. Low Impact Development Design Strategies 3

III.A. Optimization of Site Layout 3

III.A.1. Limitation of development envelope 3

III.A.2. Preservation of natural drainage features 3

III.A.3. Setbacks from creeks, wetlands, and riparian habitats 3

III.A.4. Minimization of imperviousness 3

III.A.5. Use of drainage as a design element 4

III.B. Use of Permeable Pavements 4

III.C. Dispersal of Runoff to Pervious Areas 4

III.D. Bioretention or other Integrated Management Practices 4

IV. Documentation of Drainage Design 4

IV.A. Descriptions of each Drainage Management Area 4

IV.A.1. Table of Drainage Management Areas 4

IV.A.2. Drainage Management Area Descriptions 5

IV.B. Integrated Management Practice Descriptions 5

IV.C. Tabulation and Sizing Calculations 6

V. Source Control Measures 6

V.A. Site activities and potential sources of pollutants 6

V.B. Source Control Table 6

V.C. Features, Materials, and Methods of Construction of Source Control BMPs 6

VI. Stormwater Facility Maintenance 7

VI.A. Ownership and Responsibility for Maintenance in Perpetuity 7

VI.B. Summary of Maintenance Requirements for Each Stormwater Facility 7

VII. Construction Plan C.3 Checklist 7

VIII. Certifications 8

Tables

Table 1. Project Data x

Table 2. Non-LID Treatment Measures ..... `x

Table 3. Sources and Source Control Measures x

Table 4. Construction Plan C.3 Checklist x

Figures

Vicinity Map A1

Stormwater Control Plan A2

Attachments

IMP Sizing Calculator Output

Appendix

This Stormwater Control Plan was prepared using the template dated February 2018.

I. PROJECT DATA

Table 1. Project Data

Project Name/Number	Broadway & Tuolumne Street Property (2019-05-002)
Application Submittal Date	
Project Location	1888 Broadway & 2801 Tuolumne Street, Vallejo, CA 94589 . The property is identified by its APN(s) as 0052090220, 0052090170, 0052090230, 0052090210.
Name of Developer	Bunty Sidhu
Project Phase No.	Single Phase
Project Type and Description	Upgrade of concrete plant to low carbon plant, including changes required by the city to entrance concrete drive.
Project Watershed	Vallejo #6 Watershed
Total Project Site Area (acres)	3.91 Acres
Total Area of Land Disturbed (acres)	0.24 Acres
Total New Impervious Surface Area (sq. ft.)	4,000 sq ft
Total Replaced Impervious Surface Area	2,772 sq ft
Total Pre-Project Impervious Surface Area	165,035 sq ft
Total Post-Project Impervious Surface Area	169,035 sq ft
50% Rule[*]	This project is below 50%.
Project Density	0 residential units / 4 acres
Applicable Special Project Categories	none
Percent LID and non-LID treatment	100% LID
HM Compliance [†]	Does not apply

II. SETTING

Location

The Property is located at 1888 Broadway Street and 2801 Tuolumne Street, Vallejo, CA 94589. The Property is located on the southeast corner of the intersection of Lincoln Highway (Broadway Street) and Tuolumne Street, within the west-central portion the city of Vallejo, California. The surrounding area consists of a mix of commercial, industrial, and residential properties. The city of Vallejo is located between the Napa River to the west and the Sulsun Bay to the east. According to the most recent USGS Topographic maps covering the Property and vicinity, the Property is relatively flat and lies at approximately 22 feet above mean sea-level.

Vegetation

The Property is currently a landscaping material retail sales yard with a small concrete batch plant, therefore little vegetation is located onsite.

Drainage

Surface water at the site consists of precipitation. In general, the site drains via sheet flow toward Broadway Street.

Groundwater

Historical records retrieved from nearby monitoring wells identified water at approximately 24 to 50 feet below ground surface. Actual groundwater was encountered at 20 feet below the ground surface during a past investigation onsite.

II.A. Project Location and Description

The Property is relatively flat and consists of an approximately 3.91-acres and consists of four parcels and is zoned Business/Light Industrial with a planned land use of Business/Light Industrial. The project includes a single phase equipment upgrade. The Property is situated between Lincoln Highway and the railroad tracks which run along Almond Avenue, with the Property being south of Tuolumne Street. The Property consists of two buildings, the larger is a warehouse of roughly 19,000 square feet and located at the northeastern portion of the Property. The smaller structure is an office building of roughly 1,380 square feet and located at the center west portion of the Property. A concrete plant is located at the south eastern portion of the Property and is being upgraded to a new lower carbon facility. The large yard area is used as a Tile and Stone storage yard along with the southern portion of the Property being used as a sand and aggregate storage area. The side walk and front entry have been required to be altered. Part of the front entry includes the driveway entrance to be redesigned and a 40 foot by 100 foot concrete pad poured directly adjacent to the driveway. This concrete pad is designed to help reduce dust and debris from entering the street. The concrete pad, Right of Way Landscaping, and batch plant is the subject of this report and is significantly under the 50% rule. The objectives of this design is to help minimize runoff from entering the street at the front of the yard. The surrounding area is a mix of commercial and residential. The property itself has significant parking area for a relatively small staff. See plate 1 for Vicinity Map.

II.B.Existing Site Features and Conditions

The Property is relatively flat with a sloped yard area at the far northeastern corner the remainder of the site is a concrete work yard which drains to Lincoln Highway. The overall shape of the Property is square. The only landscaped area is along the slope at the northeastern corner of the

Property. The remainder of the Property is work yard, warehouse and office. The soils mapped by USDA are reported as Solano County, California (CA095) Rincon Clay Loam, with 0 to 2 percent slopes and represented with the map unit RoA2. A liquefaction study was done at the site, groundwater was reported as 20 feet below ground surface with the soils above the ground water being classified as Clay Class C. 94% of the Property is impervious surface. The local municipal storm drain is located just north of the western truck entrance.

II.C. Opportunities and Constraints for Stormwater Control

The proposed work at the Property is to upgrade the existing concrete plant to a low carbon more environmentally friendly unit. This is considered very desirable; this has required additional work including an upgrade to the sidewalk, landscaping in the right of way and entry area. The disturbed right of way planting area, the concrete entry and disturbed area at the batch plant are the subject of this Storm Water Control Plan. The concrete truck driveway will be removed and regraded. The heavy truck usage constrains the type of entry to concrete.

III. LOW IMPACT DEVELOPMENT DESIGN STRATEGIES

The Area of the Property being worked on is relatively small and the usage as a truck entry prevents most alternative designs. The current drainage will not change significantly with the proposed construction.

The proposal is to add ground planter boxes directly in front of the existing building (north of the entry driveway) and utilize them as in ground bioretention facility with Vault Storage under a portion of the front entry area and add a trench drain along the northern portion of the new concrete surface that allows for easy cleaning and debris removal. The area around the batch plant will collect runoff via a shallow drainage swales that directs the runoff to a concrete lined pit that will hold water until it can be recycled in the batch plant operations.

III.A. Optimization of Site Layout

The area of alteration is limited to the truck entry and does not change the current drainage pattern. The current drainage is toward a city storm drain. Due to the heavy truck traffic it is not possible to use less impervious design materials. The drainage will remain relatively unchanged from its current condition with a slight modification of flow into the Bioretention Facility and Vault Storage.

III.A.1. Limitation of development envelope

The area is relatively small and is a truck entry. The area of alteration will be a total of 10,011 square feet in total.

III.A.2. Preservation of natural drainage features

The current drainage will be relatively unchanged only modified to encourage flow to the trench drain, swale and Bioretention Facility and the Vault storage.

III.A.3. Setbacks from creeks, wetlands, and riparian habitats

The primary drainage in the area is to the city stormwater system.

III.A.4. Minimization of imperviousness

Current usage is unchanged.

III.A.5. Use of drainage as a design element

The Bioretention Facility will be located in the planter area.

III.B. Use of Permeable Pavements

This is not appropriate for the project as the heavy truck use will quickly plug all but the stoutest drainage systems. The current design will assist in the collection of materials that may fall from the trucks and the ease of maintenance and cleanup.

III.C. Dispersal of Runoff to Pervious Areas

There are no areas that can be used in this manner on the property.

III.D. Bioretention or other Integrated Management Practices

Currently planter boxes occupy the area in front of the office adjacent the front entry and part of the needed regraded front entry area. By incorporating a bioretention planter into the front it will minimize the financial impact of additional grading.

IV. DOCUMENTATION OF DRAINAGE DESIGN

IV.A. Descriptions of each Drainage Management Area

The front entry driveway is 4,000 sq ft. The batch plant is 2,772 sq ft and the Right of way landscaping is 3,074 sq ft

IV.A.1. Table of Drainage Management Areas

Table 2. Drainage Management Areas

DMA Name	*Area (SF)*	*Surface Type/Description*	*DMA Type/Drains to*
DMA 1 *R/W landscaping*	*3,074*	*Landscaping*	*Self-Treating*
DMA 2 *Front Entry*	*4,000*	*Concrete*	*Drains to IMP 1*
DMA 3 *Batch Plant*	*2,772*	*Concrete*	*Self-Retaining*
IMP 1	*165 bioretention* *470 drainage vault*	*Planter* *Drainage box*	*Imp 1 includes a bioretention facility and drainage vault.*

IV.A.2. Drainage Management Area Descriptions

DMA 1 [R/W landscaping], totaling 3,074 square feet, will be graded slightly to allow runoff to flow into the street gutter and then into the city's stormwater drainage system .

DMA 2 [Front Entry], totaling 4,000 square feet, drains [drive way area]. DMA [Front Entry] drains to [IMP 1]. [Bioretention Facility and Drainage Vault.]

DMA 3 [Batch Plant], totaling 2,772 square feet, drains [batch plant]. DMA [batch plant] drains to a concrete lined pit which then is utilized in the concrete making.

IV.B. Integrated Management Practice Descriptions

Runoff from the driveway will be routed to the bioretention facility located in front of the office building. See Exhibit. The new pavement drainage system will be designed and constructed to the criteria in the Stormwater C.3 Guidebook, 7th Edition, including the following features:

• the planter will be surrounded by a concrete or concrete filled block curb.

• Each layer built flat, level, as specified in the plans:

o Bottom of Gravel Layer (BGL)

o Top of Gravel Layer (TGL)

o Top of Soil Layer (TSL)

o Overflow Grate

The Planter design included in the description:

• 18 inches Class 2 permeable, Caltrans specification 68-2.02F(3).

Class 2 Permeable Material Gradation Requirements

Sieve size	Percentage passing
1"	100
3/4"	90–100
3/8"	40–100
No. 4	25–40
No. 8	18–33
No. 30	5–15
No. 50	0–7
No. 200	0–3

• 18 inches sand/compost mix meeting the specifications approved by the Regional Water Quality Control Board in April 2016.

• 4 in. dia. PVC SDR 35 perforated pipe underdrain, installed with the invert at the top of the Class 2 permeable layer with holes facing down, and connected to the overflow structure at that same elevation

• Plantings selected for water conservation.

• Irrigation system with drip emitters and "smart" irrigation controllers

IV.C. Tabulation and Sizing Calculations

See Attachment 1, Output from the IMP Sizing Calculator

V. SOURCE CONTROL MEASURES

V.A.Site activities and potential sources of pollutants

On-site activities that could potentially produce stormwater pollutants include:

- Concrete spillage from Concrete batch plant.
- Dirt from trucks entering and leaving the facility.

V.B.Source Control Table

Table 3. Source Controls

Potential source of runoff pollutants	*Permanent source control BMPs*	*Operational source control BMPs*
Concrete Spillage	The drive entry area is designed to be relatively flat to slow flow from trucks and allow yard equipment to collect and remove material. Additionally, a flat-bottomed trench drain will be installed to allow debris to settle and allows a shovel to clean out the drain of debris	Maintenance of the equipment and use inspections are required on batch plants to maintain proper working order. Including inspection and cleaning of the trench drain.
Dirt from trucks entering or leaving.	The drive entry area is designed to be relatively flat to slow flow from trucks and allow yard equipment to collect and remove material.	As with any truck loading area the facility must be maintained constantly during hours of work to keep clean and in proper working condition.

V.C.Features, Materials, and Methods of Construction of Source Control BMPs

The bioretention facility consists of the Trench Drain, The Flow-through Planter and a Drainage Box.

<u>Trench Drain</u>

The trench drain should be rated for Load Class E

The Trench Drain Grates should be ADA compliant.

The trench Drain Grates need to be removable for easy cleanout and inspection.

<u>Flow-Through Planter</u>

The Planter should be constructed with Concrete or concrete fill Block.

The gravel layer should be a minimum of 12 inches thick with a recommended thickness of 18 inches.

Drainage Box

The Drainage Box should include at least 24 inches of space below the inlet pipe to the top of the base layer.

The Drainage Box lid should be secured to prevent accidental dislodging and prevent opening by unauthorized persons.

VI. STORMWATER FACILITY MAINTENANCE

VI.A. Ownership and Responsibility for Maintenance in Perpetuity

The bioretention facility will be located in front of the office building and allow easy maintenance and cleanup access. The property owner accepts responsibility for interim operation and maintenance of stormwater treatment and flow-control facilities until such time as this responsibility is formally transferred to a subsequent owner.

VI.B. Summary of Maintenance Requirements for Each Stormwater Facility

The facilities will be examined for visible trash and debris during regular policing of the site, and trash and debris will be removed. The facility, and the facility sign, will be inspected for graffiti or vandalism and any problems corrected.

After Significant Rain Events: A significant rain event is one that produces approximately a half inch or more rainfall in a 24-hour period. Within 24 hours after each such event, the following will be conducted: The surface of the facility will be observed to confirm there is no ponding. • Inlets will be inspected, and any accumulations of trash or debris will be removed.

The surface of the mulch layer will be inspected for movement of material. Mulch will be replaced and raked smooth if needed.

Prior to the Start of the Rainy Season: In September or each year, the facility will be inspected to confirm there is no accumulation of debris that would block flow, and that growth and spread of plantings does not block inlets or the movement of runoff across the surface of the facility.

VII. CONSTRUCTION PLAN C.3 CHECKLIST

Table x. Construction Plan C.3 Checklist

Stormwater Control Plan Page #	*BMP Description*	*See Plan Sheet #s*
Pg 1	Bioretention Facility	SW-1
Pg 1	Drainage Vault	SW-1

VIII. CERTIFICATIONS

The selection, sizing, and preliminary design of stormwater treatment and other control measures in this plan meet the requirements of Regional Water Quality Control Board Order R2-2015-0049.

By

James Robinson, PE 69045

Project Name: Broadway Street Project
Project Type: Treatment and Flow Control
APN: 0052-090-170, -210, -220, -230
Drainage Area: 10,011
Mean Annual Precipitation: 26.6

Self-Treating DMAs

DMA Name	Area (sq ft)
RW Landscaping	3,074.0

II. Self-Retaining Areas

Self-Retaining DMA	
DMA Name	**Area (sq ft)**
Batch Plant	2,772

IV. Areas Draining to IMPs

IMP Name: IMP1
IMP Type: Bioretention + Vault
Soil Group: IMP1

DMA Name	Area (sq ft)	Post Project Surface Type	DMA Runoff Factor	DMA Area x Runoff Factor
Concrete Pad	4,000	Concrete or Asphalt	1.00	4,000
			Total	4,000

IMP Sizing

	IMP Sizing Factor	Rain Adjustment Factor	Minimum Area or Volume	Proposed Area or Volume
Area	0.040	1.000	160	165
Volume	0.152	0.767	466	470
Maximum Underdrain Flow (cfs)				0.01
Orifice Diameter (in)				0.41

Report generated on 12/9/2019 12:00:00 AM by the Contra Costa Clean Water Program IMP Sizing Tool software (version 1.3.1.0).

DEPARTMENT OF RESOURCE MANAGEMENT

SOLANO COUNTY

Environmental Health Division

675 Texas Street, Suite 5500
Fairfield, CA 94533-6342
(707) 784-6765
Fax (707) 784-4805

www.solanocounty.com

SWEEPS # 21/22-102053-4

Attachment 3

DATE: 12/17/18 Type of inspection: ✓ Routine __Follow-up __Complaint __Other

Business Name Crown Hill Materials Address 1888 Broadway

City/ ZIP VJ 94590 Manager Fritz Swagger / Fred Amezqua

Phone ___/552/3686 Emergency Phone ___/___/___ # Employees 5-9 Pg 1 of 1

HAZARDOUS MATERIALS RELEASE RESPONSE PLAN & INVENTORY and HAZARDOUS WASTE

The items below have been inspected. Circled items represent violations of the California Health and Safety Code (HSC) or the California Code of Regulations (CCR) Title 19 & Title 22, as listed and shall be corrected as follows or on page(s) _____:

Class I	Class II	Minor	insp/co	VIOLATIONS	CORRECTIVE ACTIONS
(A) BUSINESS PLAN				Consent to inspect, photograph, & sample YES ☑ NO ☐ (HSC 25511)	
10	40	70	✓	Plan not available, on file, or updated HSC 25505, 25506, 25507, 25508	Haz Mat Bus Plan (HMBP) inspection found:
11	41	71	✓	Chemical inventory statement not filed, or updated – HSC 25505, 25506, 25508	HMBP accepted on CERS 6/2017.
12	42	72	✓	Site diagram not accurate – HSC 25505	The following reportable materials onsite today:
13	43	73	✓	Spill procedures and phone #s not available– HSC 25505, 25508, & 25510	• cement + cement based products • waste oil
14	44	74	✓	Mitigate hazards to people, property, Environment - CCR 2658 (c)	• 1000 Gal Diesel • oxygen
15	45	75	✓	SPCC required HSC 25270.3-# tanks 1 Sizes 1000 Gal + drums, ___, ___	• DEF • acetylene • Cement Additives (tanks/drums) • cement dyes • cement lube (soap)
(B) WASTE				Consent to inspect, photograph, & sample YES ☑ NO ☐ (HSC 25185)	
10	40	70	✓	Waste determination not made CCR 66262.11	Neither the HMBP nor waste records available today.
11	41	71	✓	No EPA ID number – CCR 66262.12, 66263.42, HSC 25250.8	Waste oil drums and the following are not properly labeled: Blue poly drum by diesel tank, cement silo, additive drums and the water tote for dust.
12	42	72	✓	Containers/tanks not labeled CCR, 66261.7, 66262.34	No evidence of oil filter collection.
13	43	73	✓	Containers/tanks not managed properly –CCR, 66265.170-178& 190-202	Extra O_2 + Acet bottles found on their sides.
14	44	74	✓	Incompatibles not separated CCR 66262.34 & 66265.177	(A) Update CERS account (note, new pad being poured for cement plant).
15	45	75	✓	Ignitable/reactive waste not 50' from property line – CCR 66265.176	(B) Make both CERS info and waste records available onsite.
16	46	76	✓	Waste area not inspected weekly/daily CCR 66265.174 &.195	(C) Correct labeling issues listed above.
17	47	77	✓	Spill kit, communication device or alarm not available – CCR 66265.32	(D) Properly collect and dispose waste oil filters.
18	48	78	✓	Facility not designed to minimize release – CCR 66265.31	(E) Do not store acetylene bottles anyway but upright.
19	49	79	✓	Manifests/receipts not available HSC 25160.2, CCR 66262.23, 66262.40-42	(F) Keep welding bottles secured.
20	50	80	✓	Unauthorized disposal/treatment of waste HSC 25189.5 and 25201	(G) Verify compliance by 1/31/2019.
21	51	81	✓	Waste oil/fuel filters not managed properly HSC 25250.22 &CCR 66266.130	
(C) COMMON VIOLATIONS					
38	68	98		Contingency/Emergency Response plan inadequate CCR 66265.50-56, HSC25505	
39	69	99		Training; records not available and/or documented – CCR 66265.16, HSC 25505	

EPA ID Number _____ CERS ID NUMBER _____

Class I = Major threat (health, safety, or the environment) Class II = Moderate threat, Minor = Low threat Corrected On Site = COS Not Later Than = NLT

The violations cited on _____ have not been corrected. An additional re-inspection shall be conducted on or after _____. A re-inspection fee will be billed to your facility for this service. Failure to comply may also result in additional fees , administrative enforcement, and or further legal action.

For the violations listed above, submit the Return to Compliance Letter (RTC) in 30 days 15 days NLT _____.

Received By Tom Sw Inspector _____ Date 12/17/18

T:ENVHLTH\HAZMAT\Cupa Templates\HMBP-Haz waste\Inspection Forms\Official CUPA Inspection formfront.doc.

Attachment 4

BAY AREA AIR QUALITY MANAGEMENT DISTRICT

November 10, 2020

Crown Hill Materials LLC
1888 Broadway Street
Vallejo, CA 94589

Attention: Bunty Sidhu

Application Number 30596
Plant Number: 24731
Equipment Location: *same as above*

Dear Applicant:

SUBJECT: LETTER OF EXEMPTION

We have completed our evaluation of your application for a Permit to Operate the following equipment:

S-1 Sand and Aggregrate Storage Pile
S-2 Aggregate/Sand Storage Bin and Conveyors
S-5 Truck Mixed Product Loading
Abated by
A1 **Water Spray System**

S-3 Cement Storage Silo
S-4 Cement Supplement Storage Silo (Fly Ash/Slag)
Abated by
A2 Baghouse/Fabric Filter

We have determined that your operation is exempt from permitting per the following:

2-1-115 Exemption, Particulate Sources at Quarries, Mineral Processing and Biomass Facilities: The following potential PM_{10} sources are exempt from the requirements of sections 2-1-301 and 302, provided that the source does not require permitting pursuant to Section 2-1-319.

115.1 Sources located at quarrying; mineral or ore handling or processing; concrete production; asphaltic concrete production; marine bulk transfer stations; concrete or asphaltic concrete recycling; vehicle shredding; glass manufacturing; handling or processing of cement, coke, lime, flyash, fertilizer, or catalyst; or other similar facility which meets one of the following:

1.1 Mixer and other ancillary sources at concrete or aggregate product production facilities with a maximum rated production capacity less than 15 cubic yards (yd^3) per hour;

(Amended 6/7/95; 5/17/00)

This exemption applies solely to permits. The equipment must be operated in compliance with any applicable District regulations and with other regulatory agency requirements. The District's regulations may be viewed online at www.baaqmd.gov/. Note that this exemption is not permanent. Any change in your operation or in District regulations may require you to obtain permits in the future.

Please include your application number with any correspondence with the District. If you have any questions on this matter, please call **Ali Roohani at (415) 749-4910**.

Very truly yours,

Pamela J. Leong
Director of Engineering

by _____
Air Quality Engineering Manager

115.01.01,9

Attachment 5

The Vince Hagan Co.
3500 Oak Lawn Ave.
Suite 720
Dallas, TX 75219
sbentley@vincehagan.com
Phone: 214-304-8218

January 03, 2019

Crown Hill Materials LLC
1888 Broadway St
Vallejo CA 94589

Subject: Sound Levels of Four Bin Vince Hagan LP Concrete Mixing System

Dear Customer,

The Sound Level of the four bin concrete mixing and dispensing system is about 67 dB(A) at 50 feet and 61 dB(A) at 100 feet in its standard configuration while loading a truck. The sound levels can increase by up to 3 dB(A) when the unit is left idling. With the installation of the plywood, ceiling tile and R-11 insulation around the machine the sound level at 50 feet decreased to 61 dB(A) but the sound level at 100 feet dropped only 1 dB(A). The predicted sound level at 150 feet from the standard configuration is 55 to 60 dB(A). The enclosure system used in this case furnished only a small amount of sound reduction at 100 feet. The measured and predicted sound levels are presented in Table I. The sound does contain several pure tones.

Table I.

Sound Levels Measured at Six Locations Around Crown Hill Materials Levels Produced By Machines Interior Or Exterior To The Building.

Position	Operation	L_{og}	L_{25}	L_{50}	L_{90}	L_{Max}	L_{eq}
50'	Standard, Loading	69	68	67	67	77	68
50'	Barrier,Auger On Idling	63	62	61	59	70	61
50'	Background	60	56	53	50	81	59
150'	Predicted-Standard, Loading	--	--	57	57	--	58
100'	Standard, Loading	63	62	61	61	69	62
100'	Standard, Idling	66	65	64	63	69	64
100'	Standard, Auger On, Idling	64	63	62	60	69	62
100'	Barrier,Auger On Idling	62	62	61	61	69	61
100'	Background	61	57	54	51	69	57
150'	Predicted, Standard, Idling	--	--	60	59	--	60

Attachment 6

INVESTIGATION REQUEST

Solano County
Department of Resource Management

21621
CONTROL NUMBER
Reported: 02/08/21

DATE	TIME	BY	PGM	INVENTORY TYPE	LOCATION	SD/Emp
02/08/21	1:15 pm	JBA	44G	100 General Solid Waste	10 VALLEJO	1042 SUP-DIST NO 1042 43 Lash, Chelsea

REQUESTED BY
ANONYMOUS

WORK PHONE **HOME PHONE** **CELL PHONE**

REGARDING **Site No.: 102053**
CROWN HILL MATERIALS
1888 BROADWAY
VALLEJO CA 94590

CONTACT PHONE **OTHER PHONE** **CELL PHONE**
707-552-3686

APN: 0052-090-210

RESPONSIBLE PARTY
SIDHU ZORA S & BALWINDER K JT
39 CRAWFORD WAY
VALLEJO CA 94589

CONTACT PHONE **OTHER PHONE** **CELL PHONE**

RESPONSIBLE PARTY SAME AS REGARDING

PREVIOUS FINDINGS / ACTION TAKEN:

02/09/21	EH01	INTIAL EH INVESTIGATION; C. Lash made a site visit on 2/9/21 and spoke with the operator who said that garbage is occasionally illegally dumped by the public in the area of the loading dock of Tuolumne street. He said they routinely remove the garbage that is dumped. Two bags of garbage and half of a couch were observed in the loading dock. A significant amount of standing water with algae growth was observed at the base of the loading dock. The operator said they would remove the garbage by the end of the day. C. Lash told the operator that she will come by the following day to verify the garbage had been removed. CL.
02/10/21	EH02	REINSPECTION; C. Lash drove by the loading dock and verified that the garbage observed had been removed. The standing water observed in the loading dock will be referred to the Solano County Mosquito Abatement District for follow-up. CL
02/16/21	EH52	COMPLAINT REFERRED AND CLOSED

NATURE OF REQUEST:

21 **SWF - LOOSE GARBAGE**
They have let garbage piled up in their loading dock. This is combined with standing water, creating no just a nuisance but also potential sources of illness for customers and the neighborhood. We have called them and they get aggressive and threatening with physical violence. Thanks for looking into it.

CONFIRMED ☐ **NOT CONFIRMED** ☐ **NOTICE ISSUED** ☐ **COS** ☐

FINDINGS / ACTION TAKEN: _____

21621

CONTROL NUMBER

NATURE OF REQUEST:

25 SWF - IMPROPER DRAINAGE

They have let garbage piled up in their loading dock. This is combined with standing water, creating no just a nuisance but also potential sources of illness for customers and the neighborhood.

CONFIRMED ☐ NOT CONFIRMED ☐ NOTICE ISSUED ☐ COS ☐

FINDINGS / ACTION TAKEN:

COMPLETE ☒ COMPLAINANT INTERVIEWED ☐

BY DATE

SPECIALIST

Solano County
Complaint Status Report

Sub-Sort: IR Date

For Complaints to 03/16/2021

Control#	Date	Pgm	Type	Sup/Dist	Requested By	Regarding	Responsible Party	Days	Compl	Intrv
Complaint					Confirmed	Not Confirmed	Notice Issued	COS	Comment	
Status	Date	Action			Letter		Date Printed	Comment		

21621 02/08/21 44G 100 1042 ANONYMOUS

CROWN HILL MATERIALS
1888 BROADWAY
VALLEJO CA 94590

SIDHU ZORA S & BALWINDER K JT
CROWN HILL MATERIALS

8 Y N

21 SWF - LOOSE GARBAGE

25 SWF - IMPROPER DRAINAGE

They have let garbage piled up in their loading dock. This is combined with standing water, creating no just a nuisance but also potential sources of illness for customers and the neighborhood. We have called them and they get aggressive and threatening with physical violence. Thanks for looking into it.
They have let garbage piled up in their loading dock. This is combined with standing water, creating no just a nuisance but also potential sources of illness for customers and the neighborhood.

Active 02/09/21 EH01 INTIAL EH INVESTIGATION

C. Lash made a site visit on 2/9/21 and spoke with the operator who said that garbage is occasionally illegally dumped by the public in the area of the loading dock of Tuolumne street. He said they routinely remove the garbage that is dumped. Two bags of garbage and half of a couch were observed in the loading dock. A significant amount of standing water with algae growth was observed at the base of the loading dock. The operator said they would remove the garbage by the end of the day. C. Lash told the operator that she will come by the following day to verify the garbage had been removed. CL.

Active 02/10/21 EH02 REINSPECTION

C. Lash drove by the loading dock and verified that the garbage observed had been removed. The standing water observed in the loading dock will be referred to the Solano County Mosquito Abatement District for follow-up. CL

Closed 02/16/21 EH52 COMPLAINT REFERRED AND CLOSED

20227 06/22/20 44G 157 1043 ED & MONA KELLEY

CROWN HILL MATERIALS
1888 BROADWAY
VALLEJO CA 94590

SIDHU ZORA S & BALWINDER K JT
CROWN HILL MATERIALS

1 Y N

99 OTHER

Bad smell,smells like manure. Lots of dust 24 hr a day from Crown Hill Materials LLC.

Closed 06/23/20 EH52 COMPLAINT REFERRED AND CLOSED

Complaint is recieved by referral from the Solano County Whistle Blower online complaint system. Environmental Health is referring the complaint to the City of Vallejo as the property is within City limits of Vallejo and the property is commercially zoned. The complainants phone number as provided is not in service today, June 23, 2020. A copy of the complaint referral is sent by email to ednmona@sbcglobal.net.
No further action at this time. Jeff Bell 6/23/2020

13570 12/23/13 44G 157 1043 ANTONIO CRUZ

CROWN HILL MATERIALS
1888 BROADWAY
VALLEJO CA 94590

SIDHU ZORA S & BALWINDER K JT
CROWN HILL MATERIALS

64 N N

22 SWF - ODOR
99 OTHER

Facility has expanded. Manure is piled against fence about 10-12 feet high and has strong odor. Cement mixer is tall, loud, and it creates lots of dust in neighborhoods.

Referred 02/25/14 19 REFERRED TO OTHER AGENCY

spoke with the Vallejo City Planning Dept (Bill), he stated that there have been similar complaints in the past. He will look into the complaints.

9881 04/05/10 44G 157 1043 SCOTT SARLEIHN

CROWN HILL MATERIALS
1888 BROADWAY
VALLEJO CA 94590

SIDHU ZORA S & BALWINDER K JT
CROWN HILL MATERIALS

32 N N

99 OTHER

Compost has a lot of plastic
Clay-like clumps in the compost have a bad odor

Sub-Sort: IR Date

For Complaints to 03/16/2021

Control#	Date	Pgm	Type	Sup/Dist	Requested By	Regarding	Responsible Party	Days	Compl	Intrv
Complaint					Confirmed	Not Confirmed	Notice Issued	COS	Comment	
Status	Date	Action			Letter		Date Printed	Comment		

Closed	05/07/10	1 INVESTIGATION COMPLETED/CLOSED	4/26/10 MHannum - received complaint this morning, called complainant who stated that the compost he bought from business contained alot of plastic and clumps of 'clay' material that smelled. 4/27/10 MHannum - went to site, spoke with the manager who stated that the material comes from either JPO in Vacaville (the majority) or Sonoma Compost. We went to the current compost stockpile which had been on site for 3-4 weeks according to the manager, Mr Sidhu. The compost was clean with little smell. Mr Sidhu will verify which vendor they bought this compst from. Mr Sidhu email me later in the day and stated that the compost on site was bought from JPO. JPO regularly submits pathogen testing to the county. No further action required.

Report Total: IRs: 4 Complaints: 6 Actions: 6

Attachment 7

CITY OF VALLEJO

DEVELOPMENT SERVICES DEPARTMENT

PLANNING DIVISION
(707) 648-4326
(707) 552-0163 FAX

BUILDING DIVISION
(707) 648-4374
(707) 552-0163 FAX

CODE ENFORCEMENT DIVISION
(707) 648-4469
(707) 649-5457 FAX

555 SANTA CLARA STREET • P.O. BOX 3068 • VALLEJO • CALIFORNIA • 94590-5934

Date 3-25-03

Raju S. Sidhu

1888 Broadway St

Vallejo, CA 94590

Application No. Site Development 03-0002

Staff Planner Bill Tuikka

Dear Applicant:

This letter confirms the decision of the Vallejo Planning Division on 3/24/03 to approve your application according to the findings and conditions in the enclosed copy of the staff report.

Please review all the conditions of approval carefully and be sure that everyone who will be involved with the construction of this project is fully aware of these conditions. If for some reason you did not receive a separate list of the "Standard Conditions", contact this department for a copy.

Prior to submitting your construction plans to the Building Division for plan check, you must submit a numbered list to the staff planner stating how you have satisfied and/or intend to satisfy each condition of approval. The list must be dated and signed by you. You may also be required to submit separate applications, plans, and fees to the various City departments or agencies mentioned in the conditions of approval.

No changes to the approved project, except those required by the conditions of approval, are to occur without prior approval of the staff planner. Please note that all plan reviews and/or field inspections require a minimum 24 hour notice.

Please feel free to contact the staff planner noted above if you have any questions regarding these requirements. The phone number is (707) 648-4326. We look forward to working with you in the future.

Sincerely,

Brian Dolan

BRIAN DOLAN
Planning Manager

Printed on ♻ Recycled Paper

STAFF REPORT AND DETERMINATION

CITY OF VALLEJO PLANNING DIVISION

Application Number:	Site Development #03-0002 as governed by Chapter 16.75 Site Development Procedures of the Vallejo Municipal Code.
Action:	Approve subject to the findings and conditions contained in the staff report.
Date of Action:	March 24, 2003

---

1. **Project Description**: The project includes the addition of a concrete blender to an existing retail landscape material business to allow sales of small amounts of concrete to the do-it-yourself homeowner. The retail landscape materials business, Crown Hill Materials is located at 1888 Broadway, on the east side of Broadway, just south of the intersection of Broadway and Tuolumne St. The proposed location of the concrete blender is illustrated on the site plan.

2. **Location**: 1888 Broadway Street; APN: 0052-090-210

3. **Applicant**: Raju S. Sidhu
   1888 Broadway Street
   Vallejo, CA 94590

4. **Owner:** Zora & Balwinder Sidhu
   1888 Broadway Street
   Vallejo, CA 94590

5. **Consistency with the General Plan:** The General Plan Land Use designation for this site is Employment. The proposed and existing use is consistent with this designation.

6. **Environmental Review:** The proposed project is exempt from the requirements of the California Environmental Quality Act (CEQA) pursuant to Sections 15303(e), Class 3 (New Construction or conversion of small structures) and 15311 Class 11 (Accessory Structures) of the CEQA Guidelines. Sections 15303 and 15311 categorically exempt the installation of new equipment and facilities from review. No special circumstances, such as a sensitive environmental location, hazardous materials or historic resources have been identified during review of the project, which would require environmental review.

7. **Conformance with the Zoning Ordinance:**

ZONING: The zoning is CL – Linear Commercial District. The landscape materials business is considered a nonconforming use in the CL zoning district. However, the addition of the concrete hopper is not considered an intensification of this use in that the business would not operate with additional hours, increase the number of employees or increase in the square footage or service area of the site. Applications for changes to the site plan are processed through a Site Development Permit.

SETBACKS: The minimum setback requirement for the CL district is a 2-foot landscaped setback along all property lines abutting streets. The site is developed to the property lines. The site is bordered on the street side by an 11-foot undeveloped landscape area that would be landscaped as part of this project.

FENCING. The required screening, except for plant materials, shall not be more than six feet in height.

A. LANDSCAPING. Landscaping shall be installed and maintained in accordance with the following provisions and the provisions of Section 16.70.70 B:

1. Boundary landscaping. Boundary landscaping is required for a minimum depth of two feet along all property lines abutting streets except for the area required for street openings.

Along Broadway Street, the site has an existing 11-foot buffer between the property fence and the curb. This area is currently poorly landscape and would be upgraded with street trees and additional landscaping and irrigation as part of this project.

2. Additional landscaping. All portions of the building site, exclusive of structures, parking areas, recreational uses and walkways shall be landscaped.

The site is intensely developed with little room for additional landscaping. Additionally, the site is fenced with little visibility from off-site.

3. Trees. At least one street tree is required for each fifty feet of street frontage or fraction thereof.

The applicant is proposing to install four street trees along the Broadway Street frontage.

The site development standards for retail landscape facility are outlined in Chapter 16.75.030 are as follows:

A. Compatibility with Adjacent Projects. All structures, outdoor storage areas and structures, parking areas and driveways shall be oriented to maintain privacy of

and be compatible with less-intensive adjacent uses. Landscape, berming and fencing shall be required if necessary to preserve privacy.

The site is located in an area that has a primarily industrial and commercial presence on Broadway Street. The site is fenced and the interior area has little visibility from off-site. Additional landscaping is proposed to be installed along the Broadway Street frontage.

B. *Circulation and Access. The circulation pattern shall provide for pedestrian and vehicle connections with adjoining uses where such traffic is anticipated. Driveway intersections with arterial and major collector streets shall be kept to a minimum and shall be readily identifiable as access to the site. On large-scale projects, pedestrian traffic should be separated from vehicle traffic. Signalization and turning lanes may be required. Heavy truck traffic and loading areas should be kept separate from other traffic. Loading areas shall be screened from public view. Access easements may be required to provide future access to adjoining parcels.*

The site has vehicular and pedestrian access from Broadway Street. The type of business would not generate a lot of pedestrian traffic. The site is currently a landscape materials business, and therefore has a variety of material stored on site. Circulation on the site provides access to the various bins of materials. Customers often park in front of the materials that they are purchasing during loading. Additional traffic created by the concrete blender use, in addition to retail customers, would consist of raw materials of sand and rock, delivered weekly, and cement, delivered monthly.

C. *Architectural Treatment. Overall architectural harmony is encouraged, with variation and interest provided through differing roof lines, canopies, building lines, setbacks, surface textures, colors and materials. Four-sided architectural treatment is appropriate on highly visible structures. The signing program should be an integral part of the building design in terms of size, placement, color and style. Open storage and solid waste storage areas should be screened in a manner compatible with the primary architectural treatment.*

The proposed concrete blender would be located near the back of the site, and at less than 20 feet high, is unlikely to be visible from the front. As part of this project, front buffer landscaping is proposed to be upgraded as discussed above.

D. *Utilities. Mechanical equipment, meter boxes and utility transformers shall be screened from view. Light standards shall be in scale and compatible with the adopted architectural style.*

No additional lighting or equipment in addition to the concrete blender is being proposed at this site.

8. **Notice and Public Comments:**

The Public Notice was sent to all surrounding property owners within 200 feet of the project on September 20, 2002 advising them of this Planning Commission hearing, of which a copy is attached to this report. A neighbor on nearby Almond Avenue has written to the Planning Division citing his concerns about a "manure" smell from the raw compost stored at the facility, combined with noise and dust from mixing the compost with sand to make top soil. A copy of this letter is attached to this report. The applicant has acknowledged that this smell has been connected with the importing of raw compost purchased from surrounding sanitary districts. The raw compost is often stocked for several weeks while the blending process take place. In order to eliminate this smell and associated dust and noise, the applicant has agreed that no raw compost would be imported to the site, and that the compost and sand mixture would be blended off-site and brought to the site as already mixed topsoil. A condition of approval has been attached to insure compliance.

9. **Staff Analysis and Determination:**

Issues related to the concrete blender project include the potential noise from the concrete blender as well as potential airborn cement dust. Additionally, the poor condition of the existing landscape frontage improvements along Broadway Street has been an issue as well as odor from raw compost stored on site. Currently, the raw compost is brought to the site as part of a mix to make topsoil. The front landscaping is to be addressed at this time with the submittal of a landscape plan as part of this project. Additionally, the applicants have agreed to eliminate raw compost on the site by having the topsoil mixed with sand off-site. The mixture would then be brought to the site as topsoil.

The applicant has submitted a sound analysis outlining additional sound that would be generated by the concrete blender. The concrete blender has a 15-horsepower hydraulic motor that would be the only source of sound from the unit. The sound analysis indicates that the additional sound would be negligible from 100 feet away as the general ambient noise in the vicinity is quite high, and will be further controlled by installing insulation around the motor.

Staff **APPROVES** Site Development #03-0003, subject to the following:

<u>Findings:</u>

These findings are based upon all evidence in the record, including this staff report, which is incorporated by reference.

A. The proposed concrete blender in an existing retail landscape materials use as conditioned is compatible with the Vallejo General Plan as per Section 5 of this report.

B. The proposed concrete blender in an existing retail landscape materials use as conditioned meets the intent and specific standards prescribed in the Zoning Ordinance as per Section 7 of this report.

C. The proposed concrete blender in an existing retail landscape materials use as conditioned is compatible with the existing use with the addition of upgraded front landscaping. The project will result in a well composed urban design, with consideration given to site, height, arrangement, texture, material, color and appurtenances, the relation of these factors to other structures in the immediate area, and the relation of the development to the total setting as seen from key points in the surrounding area.

D. The proposed addition of a concrete blender in an existing retail landscape use, as conditioned is of a quality and character that harmonizes with and serves to protect the value of private and public investments in the neighborhood.

CONDITIONS REQUIRED PRIOR TO ISSUANCE OF BUILDING PERMIT:

Planning Division:

1. The applicant shall remove any dead vegetation along Broadway Street and install the approved landscape plan as presented and attached here and shall properly maintain the new landscaping and the existing landscaping around the site.

2. The applicant shall remove all illegally installed signs on the front of the site and shall secure a sign permit for any additional signage.

3. Prior to building permit issuance, the Planning Division shall confirm that the building permit drawings and subsequent construction substantially conform to the approved Planning application drawings.

Public Works Department:

1. All public improvements shall be designed to City of Vallejo standards and to accepted engineering design standards. The City Engineer has all such standards on file and the Engineer's decision shall be final regarding the specific standards that shall apply.

2. Prior to building permit issuance; submit three sets of plans to the Department of Public Works for plan check review and approval. (Improvement or civil plans are to be prepared by a licensed civil engineer.) Plans are to include, but may not be limited to, grading and erosion control plans, frontage improvement plans including landscaping and irrigation, joint trench utility, street light plans, fencing plans and all supporting documentation, calculations, and pertinent reports.

3. All dust and erosion control shall plans shall be prepared and carried out in conformance with City standards, ordinance, and NPDES requirements.

4. Obtain a street excavation permit and encroachment permit from the Department of public works prior to performing any work within City streets or rights-of-way, or prior to any cutting and restoration work for utility trenches in existing public streets. All work shall conform to City standards.

5. The applicant/property owner shall sign an agreement to underground overhead utility lines or to participate in the cost of future under grounding overhead utility lines fronting the property on Broadway.

6. Prior to building/mechanical permit issuance, the applicant shall submit a numbered list to the Planning Division stating how each condition of project approval contained in this report shall be satisfied. The list should be submitted to the project planner who will coordinate development of the project.

7. In design of grading and landscaping, line-of-site distance shall be provided based on Caltrans standards. Installation of fencing, signage, above ground utility boxes, etc., shall not block the line-of-site of traffic and must be set back as necessary.

8. Construction inspection shall be coordinated with the Department of Public Work for review and approval.

CONDITIONS REQUIRED PRIOR TO OCCUPANCY/FINAL INSPECTION:

Planning Division:

1. Obtain an inspection from the Planning Division prior to final building inspection. All inspections require a minimum 24-hour notice. Occupancy permits shall not be granted until all construction and landscaping is completed and finaled in accordance with the approved plans and required conditions of approval or a bond has been posted to cover all costs of the unfinished work as agreed to by the Planning Manager.

2. No raw compost shall be stored on site. Any topsoil stored and sold at the site shall be blended off-site and properly stored and covered on-site to eliminate run-off during the rainy season and dust due to wind.

3. Prior to final inspection and operation of the cement blender, sound containment insulation consisting of plywood and Styrofoam or R-11 insulation shall be installed around the blender motor.

4. Required landscaping shall be maintained in a neat, clean and healthy condition. This shall include pruning, weeding, removal of litter, fertilizing replacement of plants when necessary and the regular watering of all plants

Public Works Department:

1. Prior to final building inspection, install the improvements required by the Department of public works including but not limited to streets and utilities.

2. Prior to occupancy/final building inspection, remove and replace any broken curb, gutter, sidewalk, or driveway approach as directed in the field by the City Engineer.

3. The site driveways shall be improved to avoid mud and dirt tracking from the site to Broadway Street

4. Prior to final inspection, plant street trees in accordance with the Vallejo Municipal Code and consistent with the approved plans. Street trees shall be inspected by the Public Works Landscape Inspector prior to release of final inspection

Fire Prevention:

These conditions shall apply unless otherwise approved by the Fire Marshall:

1. Prior to final building inspection, install 3A-40BC portable fire extinguishers as required by the Fire Prevention Division. One extinguisher is required per 75 feet of travel distance. (1998 CFC Standard 10-1; NFPA 10).

2. Prior to occupancy/final building inspection, submit all plans and applicable fees to the Fire Prevention Division for approval.

3. An automatic fire sprinkler system is required for the facility. (1998 CFC Section 1003.1.2 added VMC Section 12.28.190).

General Conditions:

1. The conditions herein contained shall run with the property and shall be binding on the applicant and all heirs, executors, administrators, and successors in interest to the real property that is the subject of this approval.

2. The applicant shall defend, indemnify, and hold harmless the City of Vallejo or its agents, officers, and employees from any claim, action, or proceeding against the City or its agents, officers, or employees to attack, set aside, void, or annul this approval by the City. The City may elect, at its discretion, to participate in the defense of any action.

3. If the Planning Division, either independently or as a result of complaints from the public, becomes aware that the use is being conducted in a manner which violates the conditions of this use permit or other applicable City regulations, and Planning Staff is unable to obtain compliance or abatement, staff will refer the permit to the Planning Commission for possible suspension or revocation.

Expiration:

1. The site development permit shall expire in 18 months unless building permits are secured and construction has begun, or unless the City prior to the expiration date extends this permit.

The applicant or any party adversely affected by a decision of the Planning Division may appeal the decision by filing an appeal to the Planning Commission. Such appeal must be filed in writing with the Secretary of the Planning Division within ten calendar days after the Planning Division's action. The Commission may affirm, reverse, or modify any decision of the Planning Division, which is appealed.

Prepared by: _____
Bill Tuikka – Associate Planner

Reviewed by: _____
Brian Dolan – Planning Manager

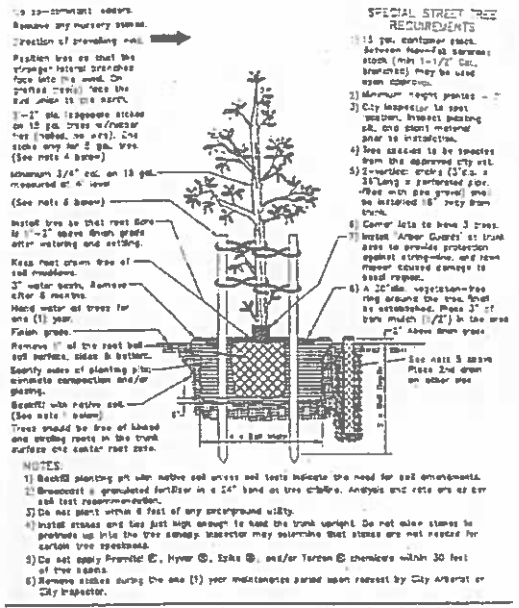

TREE PLANTING DETAILS

SCALE: NO SCALE

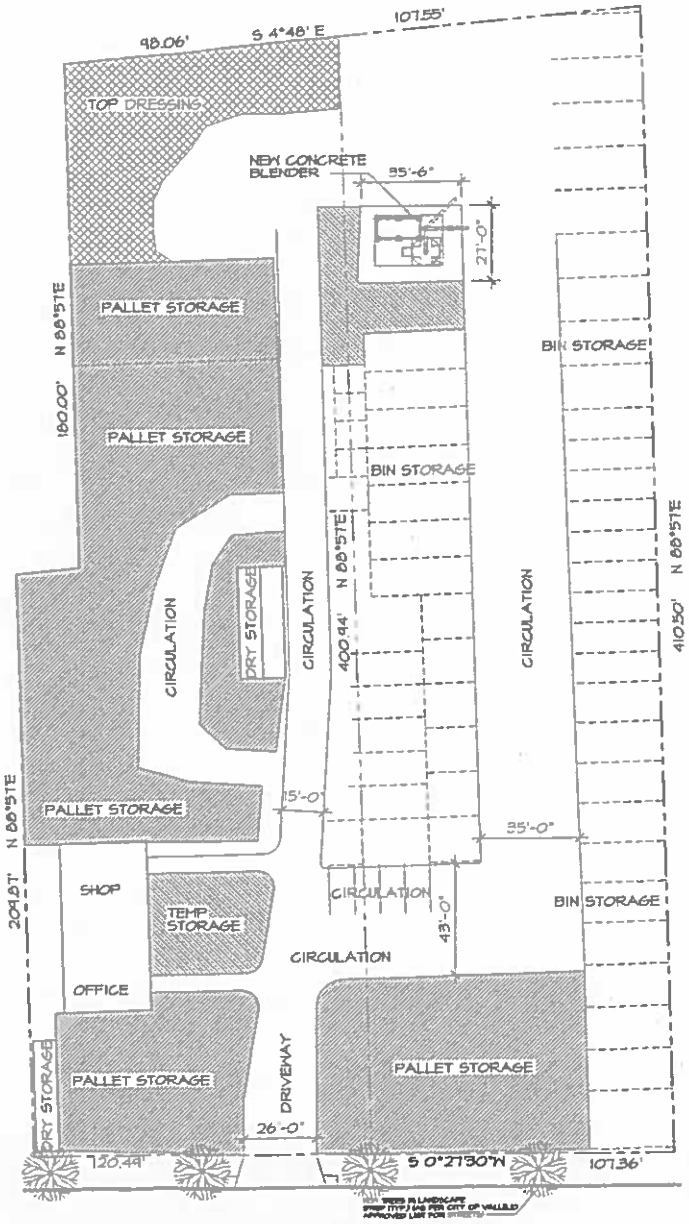

BROADWAY STREET

LEGEND

- PALLET STORAGE AREAS
- TOP DRESSING AREA
- TEMP STORAGE AREA

NORTH

SITE PLAN

SCALE: 1"=20'-0"

DENNIS MAHAFFEY DESIGN
500 EAST L STREET
BENICIA, CALIFORNIA 94510
707-745-9504

SHEET TITLE:
PROPOSED SITE PLAN

PLANS FOR:
CROWN HILL MATERIALS
1860 BROADWAY STREET
VALLEJO, CALIFORNIA

DATE: 21 FEB 03
SCALE: 1/4"=1'-0"
SHEET: A-1.1

0502

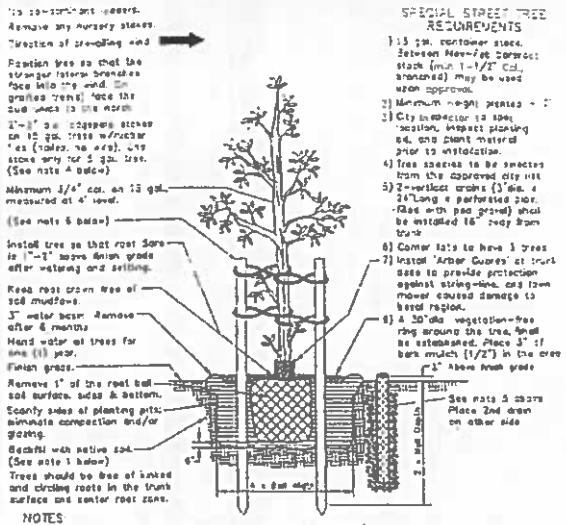

SPECIAL STREET TREE REQUIREMENTS

1) 15 gal. container stock. Between Nov-Feb bareroot stock (min 1-1/2" Cal., branched) may be used upon approval.
2) Minimum height planted - 7'
3) City inspector to stake location, inspect planting pit, and plant material prior to installation.
4) Tree species to be selected from the approved city list
5) 2-vertical drains (3" dia. x 24" long x perforated pipe filled with pea gravel) shall be installed 18" away from trunk
6) Corner lots to have 3 trees
7) Install 'Arbor Guards' at trunk base to provide protection against string-line, and lawn mower caused damage to based region.
8) A 30" dia. vegetation-free ring around the tree, shall be established. Place 3" of bark mulch (1/2") in the area
2" Above finish grade

NOTES

1) Backfill planting pit with native soil unless soil tests indicate the need for soil amendments
2) Broadcast a granulated fertilizer in a 24" band at tree drip line. Analysis and rate are as per soil test recommendations.
3) Do not plant within 6 feet of any underground utility.
4) Install stakes and ties just high enough to hold the trunk upright. Do not allow stakes to protrude up into the tree canopy. Inspector may determine that stakes are not needed for certain tree specimens.
5) Do not apply Prentiss ®, Hyvar ®, Solve ®, and/or Tordon ® chemicals within 30 feet of tree basins.
6) Remove stakes during the one (1) year maintenance period upon request by City Arborist or City Inspector.

CITY OF VALLEJO	DEPARTMENT OF PUBLIC WORKS ENGINEERING DIVISION	
DWG. NO. 5-10	SHEET ___ OF ___	TREE PLANTING DETAILS
DRAWN BY EVA	FILE NO.	
DATE 6-25-91	REF	
CHK'D BY		APPROVED

TREE PLANTING DETAILS

SCALE: NO SCALE

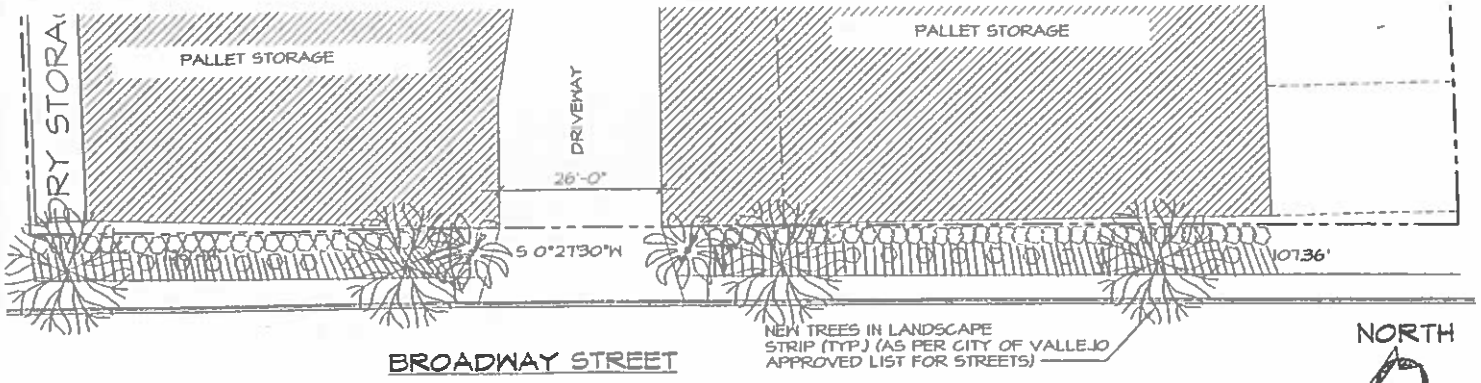

LANDSCAPE PLAN

SCALE: 1"=10'-0"

SITE PLAN

SCALE: 1"=10'-0"

DENNIS MAHAFFEY DESIGN
300 EAST L STREET
BENICIA, CALIFORNIA 94510
707-745-9304

SHEET TITLE:
PROPOSED LANDSCAPE PLAN

PLANS FOR:
CROWN HILL MATERIALS
1888 BROADWAY STREET
VALLEJO, CALIFORNIA

DATE: 21 FEB 03
SCALE: 1"=10'-0"
SHEET: L-1

0302

CROWN HILL MATERIALS

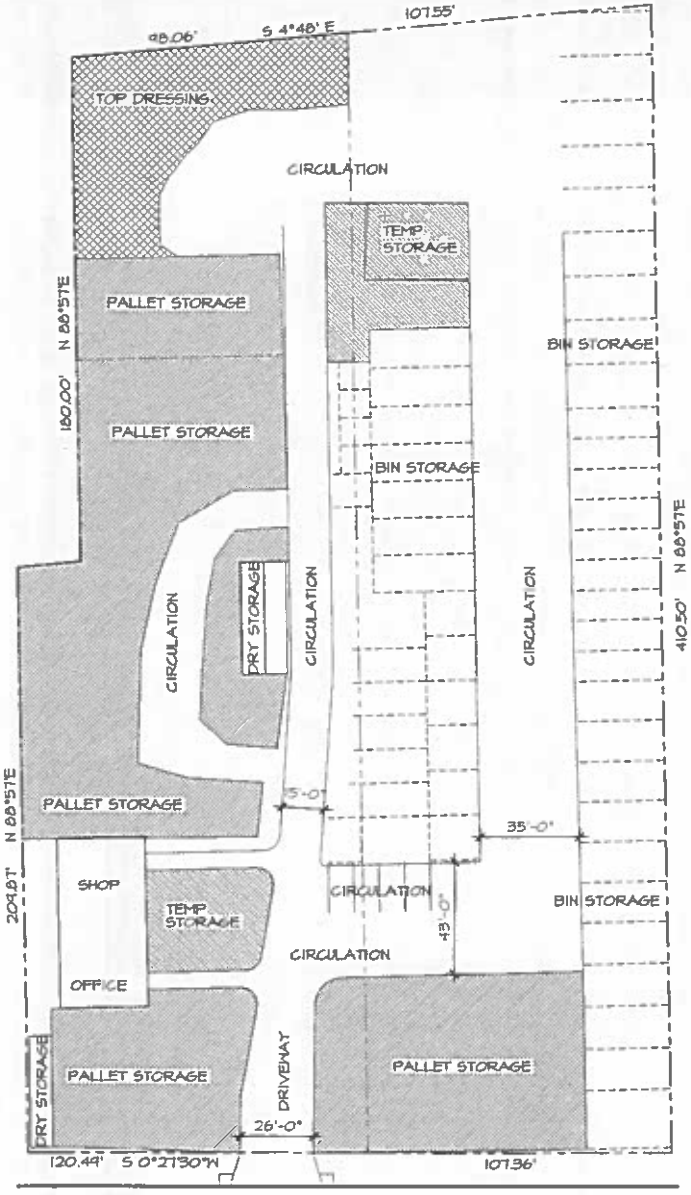

BROADWAY STREET

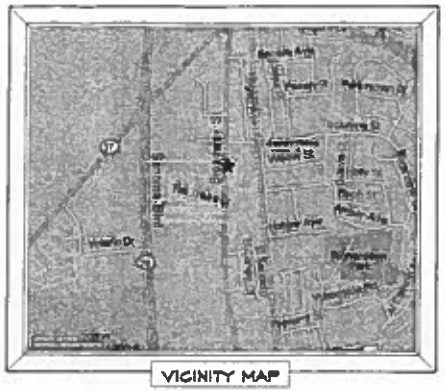

VICINITY MAP

PROJECT CALCS

LOT AREA	87,102	
AREA COVERAGE		
EXIST BLDGS	1,879	02%
TEMP DRY STORAGE	960	01%
BIN STORAGE	20,709	24%
PALLET STORAGE	25,428	29%
TOP DRESSING STORAGE	4,178	05%
PARKING/CIRCULATION	26,109	30%
MISC. USE	7,839	09%
LOT COVERAGE	87,102	100%
PROPOSED AREA CHANGE		
CONCRETE BLENDER	625	007%

APN

0052-040-210

ZONING

CL LINEAL COMMERCIAL*

SHEET LEGEND

A-1 SITE PLAN, SHEET INDEX
VICINITY MAP
A-1.1 PROPOSED SITE PLAN

LEGEND

PALLET STORAGE AREAS

TOP DRESSING AREA

TEMP STORAGE AREA

NORTH

SITE PLAN
SCALE: 1"=20'-0"

DENNIS MAHAFFEY DESIGN
300 EAST L STREET
BENICIA, CALIFORNIA 94510
707-745-3904

SHEET TITLE:
EXISTING SITE PLAN
SHEET INDEX
VICINITY MAP

PLANS FOR:
CROWN HILL MATERIALS
1888 BROADWAY STREET
VALLEJO, CALIFORNIA

DATE: 21 FEB 03
SCALE: 1/4"=1'-0"
SHEET: A-1

0302

City Of Vallejo
Planning Division
City Hall
P.O. Box 3068
Vallejo, CA 94590

MAR 2003
Received
Planning Division
City of Vallejo

March 18, 2003

Dear Bill Tuikka, AICP.

This is regarding the Notice Of Pending Action, Site Development Permit #03-0002. Location 1888 Broadway Street, APN: 0052-090-210.

This is about the addition of a concrete blender for trailer haul concrete to an existing retail landscape materials use.

The owners of this property are Zora & Balwinder Sidu, 1888 Broadway Street, Vallejo, CA 94589.

This property Owner and Neighbor is very unfriendly to the people and houses around his business. He mixes dirt and "Manure" from early morning, starting from 6am and goes all day till 9pm many nights. This is seven days a week. Year Round. The noise from his equipment is very loud and the Dust is very bad, with the SMELL of "Manure", all the time.

This makes having fun in the yard with the family and friends impossible. We have complained to the city, to your office, to the Mayors office and County Health Department. No one cares. So, The Neighbors and us got together and call the Bay Area Air Quality Management District. And have been calling for years. We have many complaint forms on hand which are documented with them in San Francisco CA.

I hope you will not allow this place it start making more dust and noise in this nice neighbor hood. Your sturdy is not up to date on the noise and dusty study. I think October 14, 1992. Is to old of a study for time March 18, 2003. A lot of things have changed and you need a newer updated report.

I hope you will not allow the application to take place. The health of the neighbor hood and my family are more important than this business making more problems for us.

Please help us and not allow this to take place. I do live right behind this place and have been to your office and talked to you about this problem. Just wanted to get it in writing.

Thank You:

Edward M Kelley

Edward M Kelley
540 Almond Ave.
Vallejo, CA 94589

Crown Hill Materials

LANDSCAPE SUPPLIES & READY MIX

City of Vallejo
Attn: Bill Tuikka,AICP
555 Santa Clara St.
Vallejo, Ca. 94590

RE: Compost Odor Complaints

Dear Mr. Tuikka,

After discussing the matter of compost odor with the owner of this company we have come up with the following solution. We are prepared to purchase our "Top-Soil" Blend from a supplier that mixes the soil on their site thus eliminating the need for us to mix soil. We will no longer carry the current compost from the Vacaville Dumps that apparently causes odor complaints to arise.

Thank You,

Raju S. Sidhu 3/10/03

Crown Hill Meaterials
1888 Broadway, Vallejo 94589
707-552-3686

CROWN HILL MATERIALS

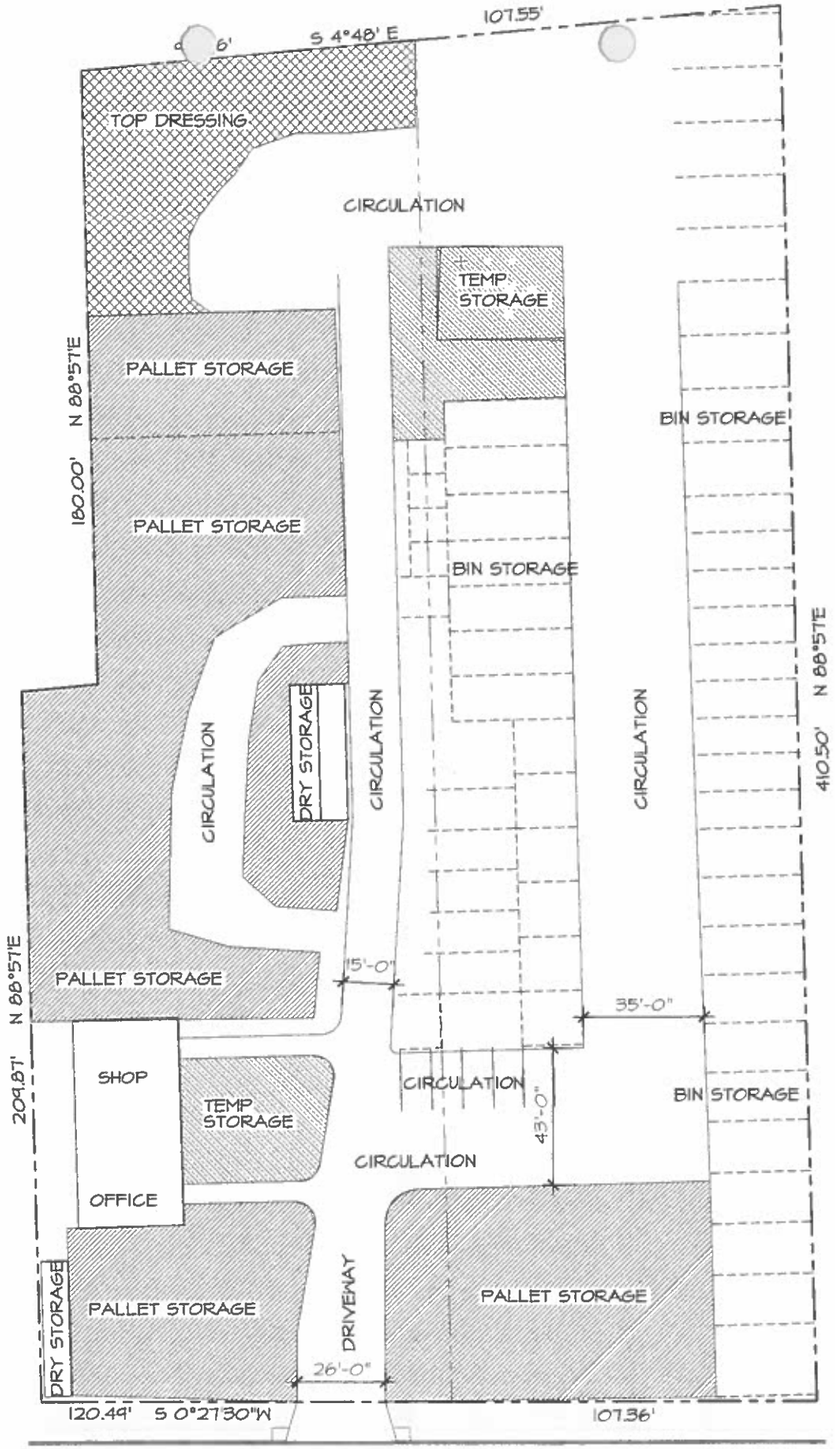

BROADWAY STREET

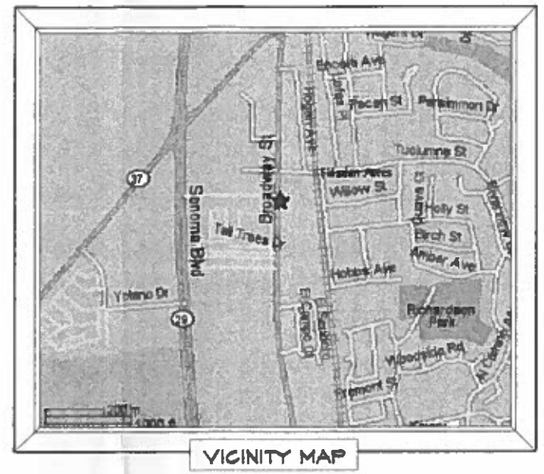

VICINITY MAP

NORTH

SITE PLAN

SCALE: 1"=20'-0"

PROJECT CALCS

LOT AREA	87,102	
AREA COVERAGE		
EXIST BLDGS	1,879	02%
TEMP DRY STORAGE	960	01%
BIN STORAGE	20,709	24%
PALLET STORAGE	25,428	29%
TOP DRESSING STORAGE	4,178	05%
PARKING/CIRCULATION	26,109	30%
MISC. USE	7,839	09%
LOT COVERAGE	87,102	100%
PROPOSED AREA CHANGE		
CONCRETE BLENDER	625	007%

APN

0052-090-210

ZONING

CL LINEAL COMMERCIAL

SHEET LEGEND

A-1 SITE PLAN, SHEET INDEX VICINITY MAP

A-1.1 PROPOSED SITE PLAN

LEGEND

PALLET STORAGE AREAS

TOP DRESSING AREA

TEMP STORAGE AREA

DENNIS MAHAFFEY DESIGN
300 EAST L STREET
BENICIA, CALIFORNIA 94510
707-745-3304

SHEET TITLE:
EXISTING SITE PLAN
SHEET INDEX
VICINITY MAP

PLANS FOR:
CROWN HILL MATERIALS
1888 BROADWAY STREET
VALLEJO, CALIFORNIA

0302

DATE: 21 FEB 03
SCALE: 1/4"=1'-0"
SHEET: A-1

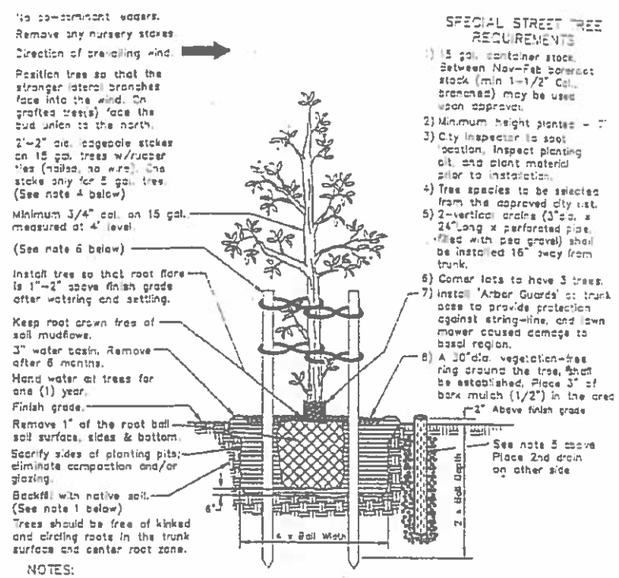

SPECIAL STREET TREE REQUIREMENTS

1) 15 gal. container stock. Between Nov-Feb bareroot stock (min 1-1/2" Cal., branches) may be used upon approval.
2) Minimum height planted - 7'
3) City Inspector to spot location. Inspect planting pit and plant material prior to installation.
4) Tree species to be selected from the approved city list.
5) 2-vertical drains (3" dia. x 24" long x perforated pipe, filled with pea gravel) shall be installed 16" away from trunk.
6) Corner lots to have 3 trees.
7) Install 'Arbor Guards' at trunk base to provide protection against string-line, and lawn mower caused damage to basal region.
8) A 30" dia. vegetation-free ring around the tree, shall be established. Place 3" of bark mulch (1/2") in the area

NOTES:

1) Backfill planting pit with native soil unless soil tests indicate the need for soil amendments.
2) Broadcast a granulated fertilizer in a 24" band at tree dripline. Analysis and rate are as per soil test recommendation.
3) Do not plant within 6 feet of any underground utility.
4) Install stakes and ties just high enough to hold the trunk upright. Do not allow stakes to protrude up into the tree canopy. Inspector may determine that stakes are not needed for certain tree specimens.
5) Do not apply Pramitol ®, Hyvar ®, Solka ®, and/or Tordon ® chemicals within 30 feet of tree basins.
6) Remove stakes during the one (1) year maintenance period upon request by City Arborist or City Inspector.

CITY OF VALLEJO		DEPARTMENT OF PUBLIC WORKS ENGINEERING DIVISION
DWG. NO. 5-10	SHEET ___ OF ___	TREE PLANTING DETAILS
DRAWN BY EVA	FILE NO.	
DATE 6-25-91	REF.	
		APPROVED

TREE PLANTING DETAILS

SCALE: NO SCALE

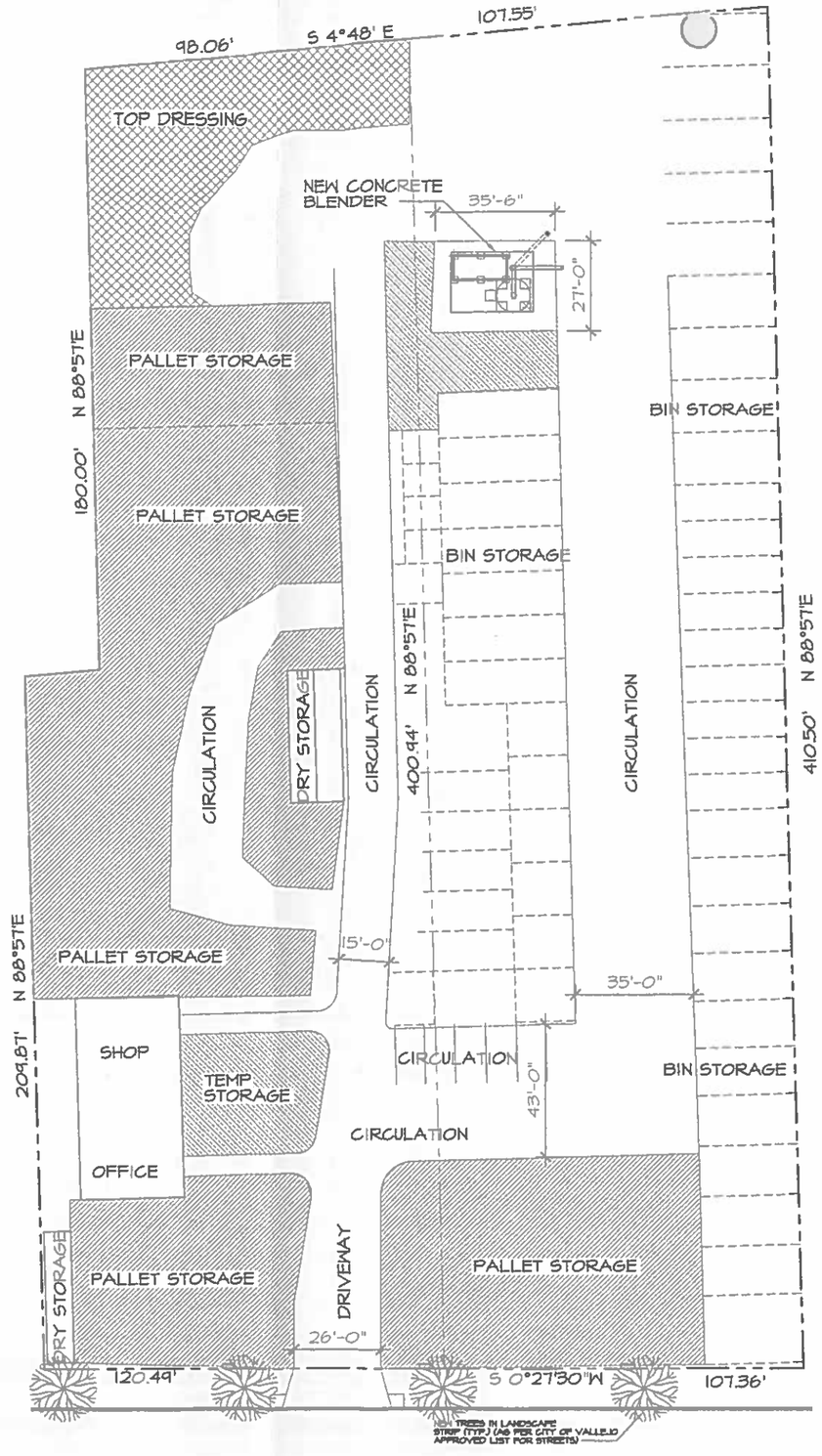

BROADWAY STREET

LEGEND

- PALLET STORAGE AREAS
- TOP DRESSING AREA
- TEMP STORAGE AREA

NORTH

SITE PLAN

SCALE: 1"=20'-0"

DENNIS MAHAFFEY DESIGN
300 EAST L STREET
BENICIA, CALIFORNIA 94510
707-745-3304

SHEET TITLE:
PROPOSED SITE PLAN

PLANS FOR:
CROWN HILL MATERIALS
1888 BROADWAY STREET
VALLEJO, CALIFORNIA

0302

DATE: 21 FEB 03
SCALE: 1/4"=1'-0"
SHEET: A-1.1

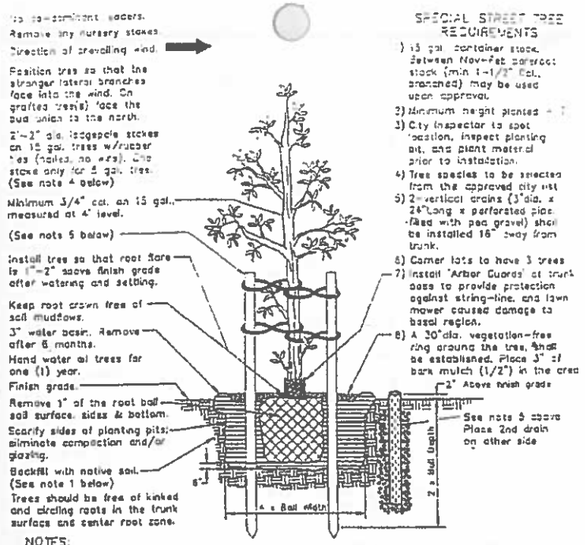

SPECIAL STREET TREE REQUIREMENTS

1) 15 gal. container stock. Between Nov-Feb bareroot stock (min 1-1/2" Cal., branched) may be used upon approval.
2) Minimum height planted = 7'
3) City Inspector to spot location, inspect planting pit, and plant material prior to installation.
4) Tree species to be selected from the approved city list
5) 2-vertical drains (3" dia. x 24" Long x perforated pipe filled with pea gravel) shall be installed 16" away from trunk.
6) Corner lots to have 3 trees
7) Install 'Arbor Guards' at trunk base to provide protection against string-line, and lawn mower caused damage to basal region.
8) A 30" dia. vegetation-free ring around the tree, shall be established. Place 3" of bark mulch (1/2") in the area

NOTES:

1) Backfill planting pit with native soil unless soil tests indicate the need for soil amendments.
2) Broadcast a granulated fertilizer in a 24" band at tree dripline. Analysis and rate are as per soil test recommendation.
3) Do not plant within 6 feet of any underground utility.
4) Install stakes and ties just high enough to hold the trunk upright. Do not allow stakes to protrude up into the tree canopy. Inspector may determine that stakes are not needed for certain tree specimens.
5) Do not apply Promitil ®, Hyvar ®, Spike ®, and/or Tordon ® chemicals within 30 feet of tree basins.
6) Remove stakes during the one (1) year maintenance period upon request by City Arborist or City Inspector.

CITY OF VALLEJO	DEPARTMENT OF PUBLIC WORKS ENGINEERING DIVISION	
DWG. NO. 5-10	SHEET ___ OF ___	TREE PLANTING DETAILS
DRAWN BY EVA	FILE NO.	
DATE 6-25-91	REF.	
[illegible] TBS	SCALE NONE	APPROVED:

TREE PLANTING DETAILS

SCALE: NO SCALE

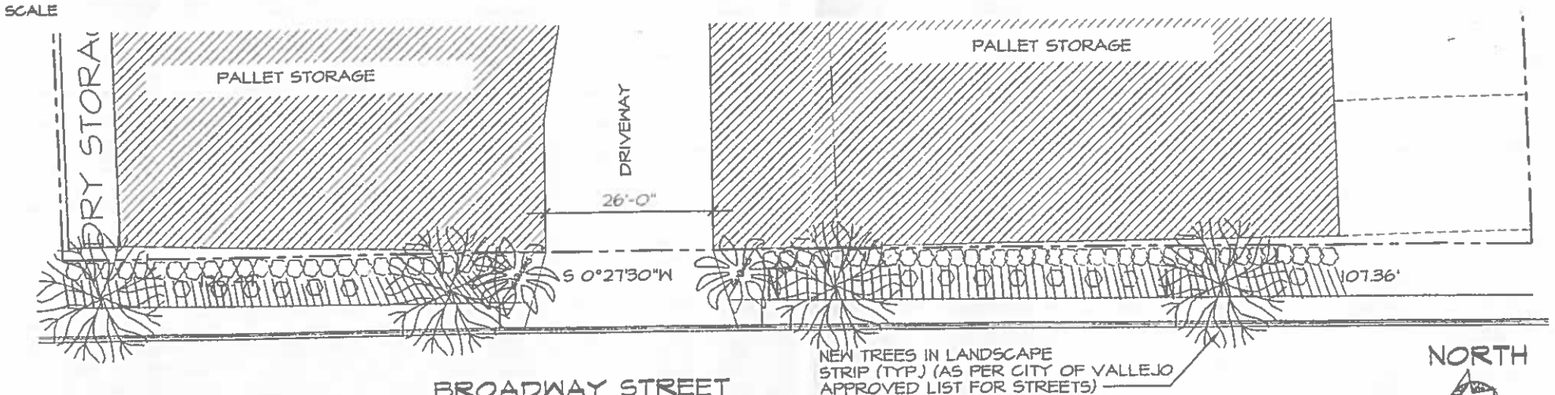

LANDSCAPE PLAN

SCALE: 1"=10'-0"

SITE PLAN

SCALE: 1"=10'-0"

DENNIS MAHAFFEY DESIGN
300 EAST L STREET
BENICIA, CALIFORNIA 94510
707-745-9304

SHEET TITLE:
PROPOSED LANDSCAPE PLAN

PLANS FOR:
CROWN HILL MATERIALS
1888 BROADWAY STREET
VALLEJO, CALIFORNIA

DATE: 21 FEB 03
SCALE: 1"=10'-0"
SHEET: L-1

0302

CITY OF VALLEJO - PLANNING DIVISION - 555 SANTA CLARA STREET - VALLEJO, CA 94590

PROJECT ROUTING FORM

PROJECT DESCRIPTION

☐ Preliminary, Informal Project Review

☒ Formal Project Application # Site Development 03-0002

Description/Name of Project Addition of Concrete Blender for Trailer haul Concrete to an existing landscape business

Location 1888 Broadway

Assessor's Parcel # 0052 090 210

Zoning Classification CL - Linear Commercial

Staff Contact Person Bill Tuikka Phone 707 648-5391

ROUTING

ROUTING DATE 2-26-03

AGENCY	COMMENT DUE DATE
☒ Building Division	
☐ Planning Department	
☒ Traffic Engineer	
☒ City Engineer	
☐ Maintenance Division	
☒ VSFCD	March 12, 2003
☒ Fire Prevention	No Comments
☐ Water Superintendent	
☐ Health Department	
☐ Vallejo Garbage Service	
☐ Crime Prevention	
☐ Community Development	
☐ GVRD	
☐ School District	
☐ Pacific Bell	
☐ Pacific Gas & Electric	
☒ Landscape Manager	
☐ Other	

TECHNICAL PROJECT REVIEW COMMITTEE

☐ This project will be discussed by the Technical Review Committee (TPRC) on Thursday, _____, at 9:00 a.m. in the Planning Department Conference Room.

☒ This project does not require a TPRC meeting.

COMMENTS

Please review the attached plan or document and write your comments, suggested conditions of approval and possible environmental impacts that require attention on the attached sheet. Comments are due on the date as indicated above. Also note if a TPRC meeting is scheduled. Thank you.

CITY OF VALLEJO - PLANNING DIVISION - 555 SANTA CLARA STREET - VALLEJO, CA 94590

RECEIVED
FEB 27 2003
CITY OF VALLEJO
PUBLIC WORKS DEPT

PROJECT ROUTING FORM

PROJECT DESCRIPTION

☐ Preliminary, Informal Project Review

☒ Formal Project Application # Site Development 03-0002

Description/Name of Project Addition of Concrete Blender for Trailer haul Concrete to an existing landscape business

Location 1888 Broadway

Assessor's Parcel # 0052 090 210

Zoning Classification CL - Linear Commercial

Staff Contact Person Bill Tuikka Phone 707 648-5391

ROUTING

ROUTING DATE 2-26-03

AGENCY	COMMENT DUE DATE
☒ Building Division	
☐ Planning Department	
☒ Traffic Engineer	
☒ City Engineer	EH 2/24/03
☐ Maintenance Division	
☒ VSFCD	
☒ Fire Prevention	
☐ Water Superintendent	
☐ Health Department	
☐ Vallejo Garbage Service	
☐ Crime Prevention	
☐ Community Development	
☐ GVRD	
☐ School District	
☐ Pacific Bell	
☐ Pacific Gas & Electric	
☒ Landscape Manager	March 12, 2003
☐ Other_____	

TECHNICAL PROJECT REVIEW COMMITTEE

☐ This project will be discussed by the Technical Review Committee (TPRC) on Thursday, _____, at 9:00 a.m. in the Planning Department Conference Room.

☒ This project does not require a TPRC meeting.

COMMENTS

Please review the attached plan or document and write your comments, suggested conditions of approval and possible environmental impacts that require attention on the attached sheet. Comments are due on the date as indicated above. Also note if a TPRC meeting is scheduled. Thank you.

COMMENTS:

City Engr. :

(A) Standard Conditions that may apply:
PW1, PW2, PW3, PW5, PW7, PW10, PW11, PW13, PW15, PW16 & PW19.

(B) Specific Conditions :

(1) Install frontage improvement fronting the property on Broadway including standard curb, gutter sidewalk and street trees. Submit improvement plans for review and approval.

(2) Sign an agreement to underground overhead utility lines or to participate in the cost of future undergrounding overhead utility lines fronting the property on Broadway.

(3) Improve the site ~~paving~~ driveways to avoid mud and dirt tracking from the site to public street (Broadway).

Thanks (EH) X4317

CITY OF VALLEJO - PLANNING DIVISION - 555 SANTA CLARA STREET - VALLEJO, CA 94590

PROJECT ROUTING FORM

PROJECT DESCRIPTION

☐ Preliminary, Informal Project Review

☒ Formal Project Application # Tentative MAP 03-02

Description/Name of Project Amend and Revise MASTER PLAN - Terrace Park
see Attached Project Description
149 Single Family Lots - Reduction of total units

Location Cunningham + McDougal streets

Assessor's Parcel # 051-270-28

Zoning Classification HDR

Staff Contact Person Bill Tuikka Phone 648-5391

ROUTING

ROUTING DATE 2-14-03

AGENCY	COMMENT DUE DATE
☑ Building Division	2-28-03
☐ Planning Department	
☑ Traffic Engineer	2-28-03
☑ City Engineer	2-28-03
☐ Maintenance Division	
☑ VSFCD	2-28-03
☑ Fire Prevention	2-28-03
☑ Water Superintendent	2-28-03
☐ Health Department	
☑ Vallejo Garbage Service	2-28-03
☑ Crime Prevention	
☐ Community Development	
☑ GVRD	2-28-03
☑ School District	2-28-03
☑ Pacific Bell	2-28-03
☑ Pacific Gas & Electric	2-28-03
☑ Landscape Manager	2-28-03
☐ Other	

SEE ATTACHED COMMENT DATED 3/10/03 EE

RECEIVED
FEB 18 2003
City of Vallejo
Utilities Dept./Water Division

TECHNICAL PROJECT REVIEW COMMITTEE

☐ This project will be discussed by the Technical Review Committee (TPRC) on Thursday, _____, at 9:00 a.m. in the Planning Department Conference Room.

☐ This project does not require a TPRC meeting.

COMMENTS

Please review the attached plan or document and write your comments, suggested conditions of approval and possible environmental impacts that require attention on the attached sheet. Comments are due on the date as indicated above. Also note if a TPRC meeting is scheduled. Thank you.

UTILITIES DEPARTMENT
VALLEJO, CALIFORNIA

March 10, 2003

SUBJECT: Tentative Map 03-02 — Name: Amend Terrace Park Subd
APN 51-270-28 — 149 lot subdivision

TO: Planning Division/Bill Tuikka

The Water Division offers the following standard comments/conditions for this Planning Division development application.

W3. **WATER SYSTEM PLANS.** All water system improvements shall be consistent with the Vallejo Water System Master Plan, 1985, prepared by Kennedy/Jenks Engineers as updated by Brown & Caldwell, 1996. Prior to Improvement Plan approval and building permit issuance, water system improvement plans shall be submitted to the **Water Division** for review and approval, and shall contain at least:

a. Location and size of fire sprinkler service connection(s).
b. Location and size of domestic service connection(s).
c. Location and size of irrigation service connection(s).
d. Location of fire hydrants.
e. Location of structures with respect to existing public water system improvements, such as mains, meters, etc.
f. Location and size of any new water mains.
g. Location and size of backflow prevention devices (required on water service connections to irrigation systems, certain commercial water users, and to commercial fire sprinkler systems, per City Ordinance 922 N.C. (2d).

W4. **FIRE FLOW REQUIREMENTS.** Fire flow requirements of the Fire department shall be complied with. Fire flow at no less than 25 psig residual pressure shall be available within 1,000 feet of any structure. One half of the fire flow shall be available within 300 feet of any structure.

1. For single family residential units, the fire flow is 1,500 gpm.
2. For other developments, see the Vallejo Water System Master Plan, 1985, prepared by Kennedy Jenks and its latest update by Brown and Caldwell dated April 1996.

W5. **HYDRAULIC CALCULATIONS.** Prior to Improvement Plan approval and building permit issuance, hydraulic calculations shall be submitted to the **Water Superintendent** demonstrating that the fire flow requirements are complied with.

W6. **FIRE PROTECTION SYSTEMS.** Fire hydrant placement and fire sprinkler system installation, if any, shall meet the requirements of the Fire Department. For combined water and fire services, the requirements of both the Fire Department and the Vallejo Water System Master Plan, with latest revisions, shall be satisfied.

W7. **WATER EASEMENTS.** Easements shall be granted for all water system improvements installed outside the public right-of-way in the City's Standard Form for Grant of Water Line Easement with the following widths:

a. 15 ft. wide (minimum) for water mains.
b. 10 ft. wide (minimum) for fire hydrants, water meters, backflow preventers, double detector check valves, etc.
c. Other facilities will be reviewed by the Water Division.

W8. **WATER METERS.** Each unit or structure shall be metered separately.

W9. **WATER SERVICE BONDS AND FEES.** Water service shall be provided by the City of Vallejo following completion of the required water system improvements and payment of applicable fees. Performance and payment bonds shall be provided to the City of Vallejo prior to construction of water system improvements. Fees include those fees specified in the Vallejo Municipal Code including connection and elevated storage fees, etc., and fees for tapping, tie-ins, inspections, disinfection, construction water, and other services provided by the City with respect to the water system improvements. The Water Division may be contacted for a description of applicable fees.

W10. **WATER SYSTEM INSTALLATION.** Prior to occupancy or final building inspection, install water system improvements as required. Backflow device/s where required shall be installed in areas hidden from public view and/or shall be mitigated by landscaping.

PROJECT SPECIFIC CONDITIONS AND OTHER COMMENTS/CONDITIONS NOT COVERED BY THE STANDARD CONDITIONS LISTED ABOVE.

W11. The 6-foot decorative metal fence along Sacramento Street shall have removal fence sections, for City's access, were the water mains cross under the fence. These removal sections shall be design to be lifted by a backhole.

W12. The project shall relocate the two existing water services for Caltrans and VSFCD to the City's approved locations on "A" Street.

Eric Jansen

Office of the Water Superintendent

Computer File EFJ03003.DOC

CITY OF VALLEJO - PLANNING DIVISION - 555 SANTA CLARA STREET - VALLEJO, CA 94590

PROJECT ROUTING FORM

PROJECT DESCRIPTION

☐ Preliminary, Informal Project Review

☒ Formal Project Application # Site Development 03-0002

Description/Name of Project Addition of Concrete Blender for Trailer haul Concrete to an existing landscape business

Location 1888 Broadway

Assessor's Parcel # 0052 090 210

Zoning Classification CL - Linear Commercial

Staff Contact Person Bill Tuitka Phone 707 648-5391

ROUTING

ROUTING DATE 2-26-03

AGENCY	COMMENT DUE DATE
☒ Building Division	See comments 03/26/03 Jerry Minnel
☐ Planning Department	
☒ Traffic Engineer	
☒ City Engineer	
☐ Maintenance Division	
☒ VSFCD	
☒ Fire Prevention	
☐ Water Superintendent	
☐ Health Department	
☐ Vallejo Garbage Service	
☐ Crime Prevention	
☐ Community Development	
☐ GVRD	
☐ School District	
☐ Pacific Bell	
☐ Pacific Gas & Electric	
☒ Landscape Manager	March 12, 2003
☐ Other	

TECHNICAL PROJECT REVIEW COMMITTEE

☐ This project will be discussed by the Technical Review Committee (TPRC) on Thursday, _____, at 9:00 a.m. in the Planning Department Conference Room.

☒ This project does not require a TPRC meeting.

FEB 2003 Received Building Division City of Vallejo

COMMENTS

Please review the attached plan or document and write your comments, suggested conditions of approval and possible environmental impacts that require attention on the attached sheet. Comments are due on the date as indicated above. Also note if a TPRC meeting is scheduled. Thank you.

COMMENTS:

1) HOW WILL DUST CONTROL BE PROVIDED?

CITY OF VALLEJO - PLANNING DIVISION - 555 SANTA CLARA STREET - VALLEJO, CA 94590

PROJECT ROUTING FORM

PROJECT DESCRIPTION

☐ Preliminary, Informal Project Review

☒ Formal Project Application # Site Development 03-0002

Description/Name of Project Addition of Concrete Blender for Trailer haul Concrete to an existing Landscape business

Location 1888 Broadway

Assessor's Parcel # 0052 090 210

Zoning Classification CL - Linear Commercial

Staff Contact Person Bill Tuikka Phone 707 648-5391

ROUTING

ROUTING DATE 2-26-03

AGENCY	COMMENT DUE DATE
☒ Building Division	
☐ Planning Department	
☒ Traffic Engineer	
☒ City Engineer	
☐ Maintenance Division	
☒ VSFCD	
☒ Fire Prevention	
☐ Water Superintendent	
☐ Health Department	
☐ Vallejo Garbage Service	
☐ Crime Prevention	
☐ Community Development	
☐ GVRD	
☐ School District	
☐ Pacific Bell	
☐ Pacific Gas & Electric	
☒ Landscape Manager	March 12, 2003
☐ Other	

TECHNICAL PROJECT REVIEW COMMITTEE

☐ This project will be discussed by the Technical Review Committee (TPRC) on Thursday, _____, at 9:00 a.m. in the Planning Department Conference Room.

☒ This project does not require a TPRC meeting.

COMMENTS

Please review the attached plan or document and write your comments, suggested conditions of approval and possible environmental impacts that require attention on the attached sheet. Comments are due on the date as indicated above. Also note if a TPRC meeting is scheduled. Thank you.

The Acoustics & Vibration Group

The Group

5700 Broadway Sacramento, CA 95820-1852

916-457-1444 FAX: 916-457-1475

Consultants in Acoustics, Vibration & Noise Control

October 14, 1992

Fred Caron
Trailer Haul Concrete Systems, Inc.
8531 Thys Court
Sacramento, CA 95828

SUBJECT: Sound Levels Of Three-Bin Portable Concrete Mixing System

Dear Mr. Caron,

The sound level of the three bin portable concrete mixing and dispensing system is about 67 dB (A) at 50 feet and 61 dB (A) at 100 feet I its standard configuration while filling a trailer/ The sound levels can Increase by up to a 3 dB (A) when the unit is left idling. With the installation of the plywood. ceiling tile and R-11 insulation around the meter. the sound level at 50 feet decreased to 61 dB (A) but the sound level at 100 feet dropped only 1 dB (A). The enclosure system used in this case furnished only a small amount of sound reduction at 100 feet. An enclosure could be designed that would give more sound attenuation than measured here. The measured and predicted sound levels are presented in Table I. It should be noted that traffic on the road in front of the test site influenced the results. As a result, the sound level exceeded 50 percent of the time. L50. was used as the metric describing the sound of the mixer. The sound does contain several pure tones.

TABLE I. Sound Levels Measured At Six Locations Around Pacific Laminating Showing Levels Produced By Machines Interior Or Exterior To The Building.

		Measured Sound Level dB(A)					
Position	Operation	L_{98}	L_{95}	L_{50}	L_{90}	L_{max}	L_{eq}
50'	Standard, Loading	69	68	67	67	77	68
50'	Barrier, Auger On, Idling	63	62	61	59	70	61
50'	Background	60	56	53	50	81	59
150'	Predicted-Standard, Loading	–	–	57	57	–	58
100'	Standard, Loading	63	62	61	61	69	62
100'	Standard, Idling	66	65	64	63	69	64
100'	Standard, Auger On, Idling	64	63	62	60	69	62
100'	Barrier, Auger On, Idling	62	62	61	61	69	61
100'	Background	61	57	54	51	71	57
150'	Predicted, Standard, Idling	–	–	60	59	–	60

February 4, 2003

Raju S. Szdhu
Crown Hill Materials
1888 Broadway
Vallejo, CA 94559

Re: Site Development Permit # 03-0002 for an addition of a Concrete Blender for trailer haul concrete to an existing landscape materials business.

Dear Mr. Szdhu:

The City of Vallejo has received the above-referenced application on January 30, 2003. As part of the review process, staff examines the application within thirty days of receipt for completeness of required information. This letter is to inform you that your application was found to be incomplete for processing. The following information must be submitted to the City in order to make this a complete application.

1. Your application must be accompanied by a minimum of 8 sets of an EXISTING site plan showing property boundaries, existing landscaping, locations of buildings, parking, circulation and access to the site. The plans shall be scaled and the scale shall be noted on the plans.
2. Additionally, please submit a minimum of 8 sets of plans showing the PROPOSED project with locations of the proposed improvements and also including the information detailed in #1. above.
3. The plans described above should include details of any proposed or existing landscaping or fencing.

Once all of the above-noted information has been submitted to the City and the application has been deemed complete, processing will begin. If you have any questions regarding this letter, please call me at 707-648-5391.

Sincerely,

Bill Tuikka
Associate Planner

001-1502-310-3008

VALLEJO PLANNING DIVISION

APPLICATION

APPLICATION NO. Bill T

PLANNER PAID CK 5889

JAN 30 2003 R 327325

COMMERCIAL SERVICES DIV.

- ☐ ADMINISTRATIVE PERMIT
- ☐ MAJOR USE PERMIT
- ☐ MINOR USE PERMIT
- ☐ OTHER
- ☐ PRELIMINARY REVIEW
- ☐ SIGN PERMIT (See reverse side)
- ☒ SITE DEVELOPMENT
- ☐ TENTATIVE MAP/PARCEL MAP Division from ____ to ____ lots
- ☐ MINOR EXCEPTION
- ☐ ZONING AMENDMENT

PROJECT INFORMATION

PROPERTY ADDRESS 1888 BROADWAY ST. VALLEJO, CA. 94589

ASSESSOR'S PARCEL NO. 0052 090210 EXISTING ZONING ~~Industrial~~ GENERAL PLAN

PROPOSED USE (office, residential, restaurant, etc.) Addition of Concrete BLENDER FOR Trailer HAUL Concrete To a existing Landscape Materials Business.

PURPOSE OF APPLICATION ⊛ SEE ATTACHED LOCAL AGENCY PACKAGE ⊛

(attach separate sheets if necessary)

APPLICANT

NAME RAJU S. SIDHU DAYTIME PHONE 707. 552. 3686

ADDRESS 1888 BROADWAY St. Vallejo, CA. 94589

PROPERTY OWNER

NAME ZORA & BALWINDER SIDHU DAYTIME PHONE 707. 552. 3686

ADDRESS 1888 Broadway St. Vallejo, CA. 94589

ARCHITECT

NAME U-CART of AMERICA DAYTIME PHONE 800-950-3366

ADDRESS 8390 A GARBER RD., SACRAMENTO, CA. 95828

ENGINEER

NAME U-CART of AMERICA DAYTIME PHONE 800-950-3366

ADDRESS 8390A GARBER RD., SACRAMENTO, CA.

I HEREBY CERTIFY THE TRUTH OF THIS APPLICATION AND ACKNOWLEDGE THAT ANY INACCURACIES IN IT SHALL, AT THE CITY'S OPTION, RESULT IN AUTOMATIC INVALIDATION OF THE ACTION BASED THEREON AND THAT FINAL APPROVAL IS DEPENDENT ON COMPLIANCE WITH THE CITY'S REQUIREMENTS.

SIGNATURE OF APPLICANT Raju Sidhu DATE 01/30/03

SIGNATURE OF PROPERTY OWNER Zora S. Sidhu DATE 01/30/03

FOR OFFICIAL USE

FEE $1365 ACTION ____ DATE ____ BY ____

NOTE: ADDITIONAL INFORMATION MAY BE NEEDED WITH THIS APPLICATION. INCOMPLETE APPLICATIONS ARE OFTEN THE MAIN CAUSE OF DELAYS IN PROCESSING. PLEASE REFER TO THE HANDOUT DESCRIBING THE SUBMITTAL AND REVIEW PROCESS FOR YOUR PARTICULAR TYPE OF APPLICATION.

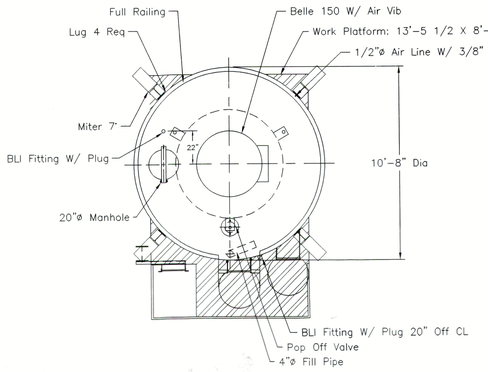

Plan: Cover

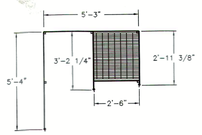

Detail: Intermediate Landing

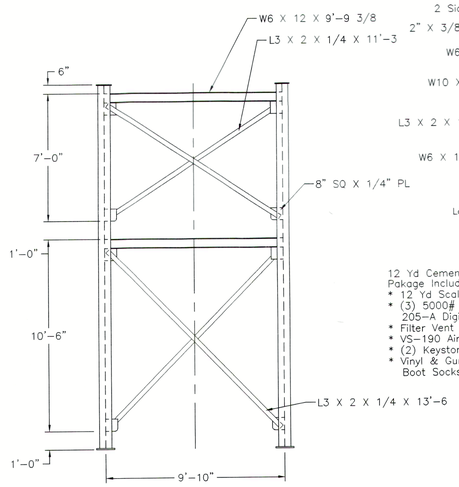

Elevation: Side View

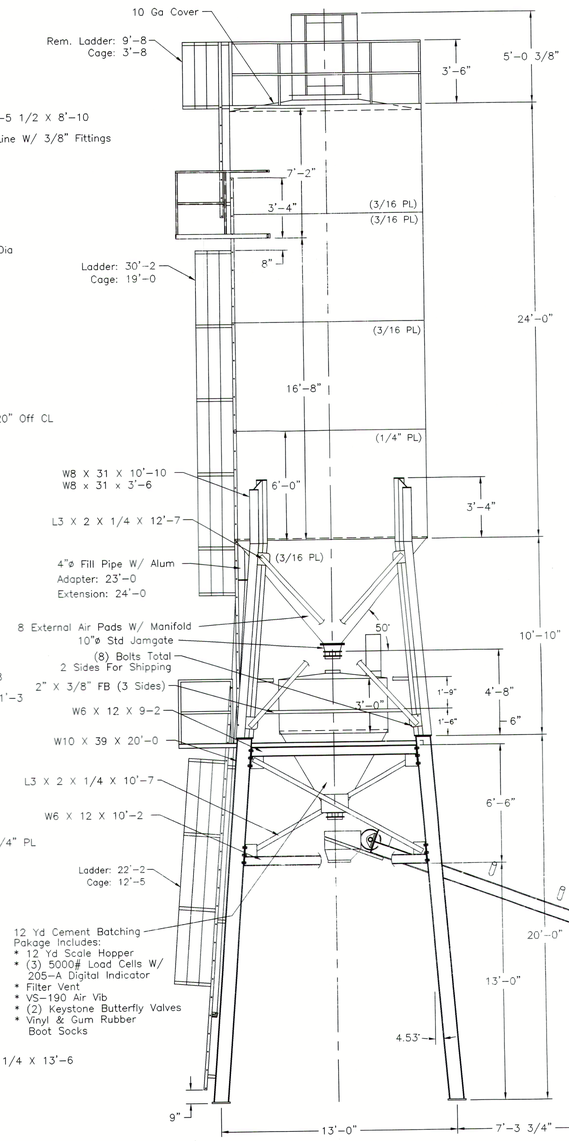

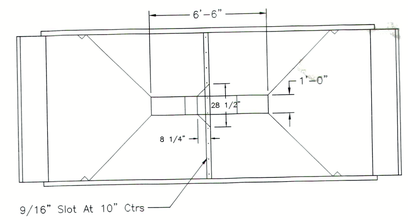

Note: Hopper Material
All Sloping Sides Are 1/4" PL
All Straight Sides Are 3/16" PL

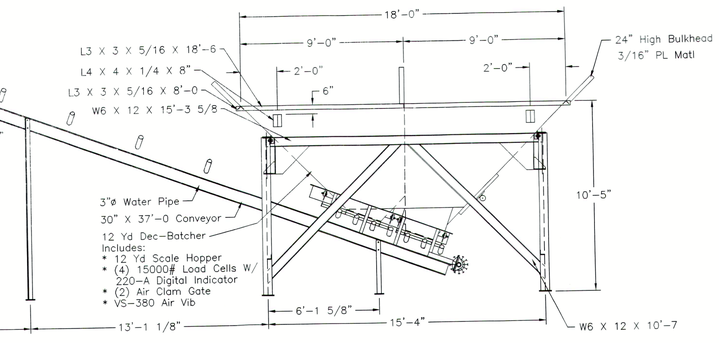

Elevation: Front View

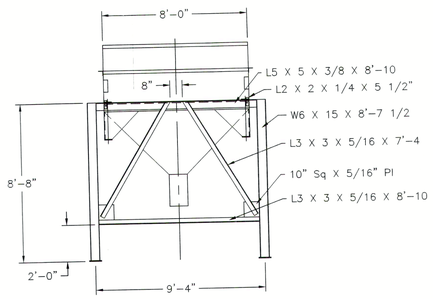

Elevation: Side View

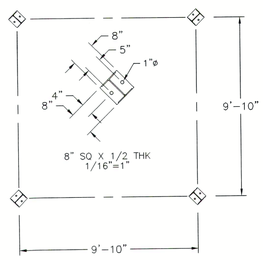

Plan: Silo Base Plate Layout

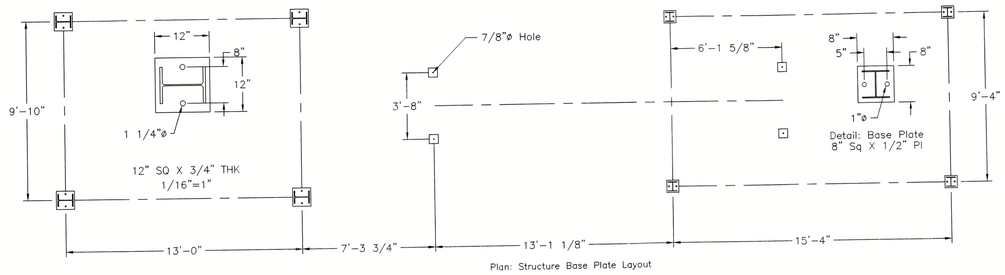

Plan: Structure Base Plate Layout
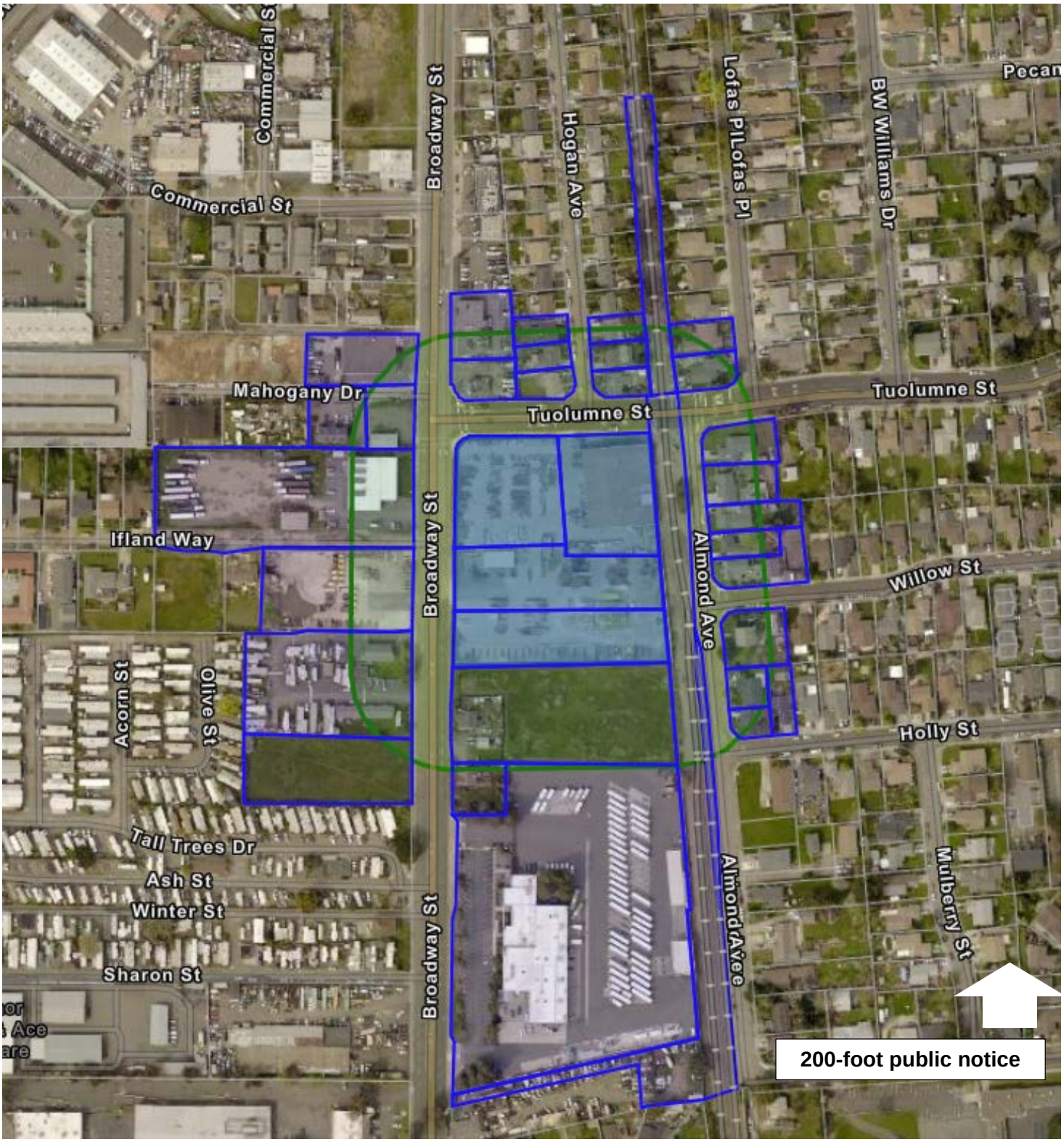
Attachment 8